SineWave Guardian™

380V – 480V

TECHNICAL REFERENCE MANUAL

FORM: SWG-TRM-E
REL. December 2013
REV. 002

Caution	Prior to start up; confirm the drive operation mode is properly set (Volts per Hertz). Please consult drive manual/manufacturer to configure proper parameters. Failure to do so may result in failure of drive or filter components.
WARNING	**High Voltage! Only a qualified electrician can carry out the electrical installation of this filter.**

Quick Reference

TABLE OF CONTENT

List of Figures

List of Tables

1. WARNINGS

Warnings and Cautions

There are two types of warnings in this manual:

- WARNING describes situations that can lead to serious faults, physical injuries, or even death.
- Caution describes situations that can lead to malfunction or possible equipment damage.

WARNING	WARNING describes situations that can lead to serious faults, physical injuries, or even death.
Caution	Caution describes situations that can lead to malfunction or possible equipment damage.

The following symbols are used in this manual.

- High Voltage Warning: warns of situations that dangerously high voltage is involved. Failure to use proper precautions may lead to serious injury or even death.
- General Warning: warns of situations that can result in serious injury or death if proper precautions are not used.
- General Caution: identifies situations that could lead to malfunction or possible equipment damage.

WARNING	High Voltage Warning: warns of situations that dangerously high voltage is involved. Failure to use proper precautions may lead to serious injury or even death.
WARNING	General Warning: warns of situations that can result in serious injury or death if proper precautions are not used.
Caution	General Caution: identifies situations that could lead to malfunction or possible equipment damage.

General Safety Instructions

WARNING	**High Voltage! Only a qualified electrician can carry out the electrical installation of this filter.**
WARNING	High voltage is used in the operation of this filter. Use Extreme caution to avoid contact with high voltage when operating, installing or repairing this filter. **Injury or death may result if safety precautions are not observed.**
WARNING	The opening of the branch circuit protective device may be an indication that a fault current has been interrupted. To reduce the risk of fire or electrical shock, current-carrying parts and other components of the filter should be examined and replaced if damaged.
WARNING	An upstream disconnect/protection device must be used as required by the National Electrical Code (NEC) or governing authority.
WARNING	Even if the upstream disconnect/protection device is open, the drive down stream of the filter may feed back high voltage to the filter. The drive safety instructions must be followed. **Injury or death may result if safety precautions are not observed.**
WARNING	The filter must be grounded with a grounding conductor connected to all grounding terminals. Modular filters must have reactor grounded througha 2”x2” area cleaned of paint and varnish on lower mounting bracket.
WARNING	Only spare parts obtained from MTE Corporation or an authorized MTE distributor can be used.
WARNING	After removing power, allow at least five minutes to elapse and verify that the capacitors have discharged to a safe level before contacting internal components. Connect a DC voltmeter across the capacitor terminals and ensure that the voltage is at a safe level.
Caution	Loose or improperly secured connections may damage or degrade filter performance. Visually inspect and secure all electrical connections before power is applied to the filter.
Caution	Prior to start up; confirm the drive operation mode is property set (Volts per Hertz). Please consult drive manual/manufacturer to configure proper parameters. Failure to do so may result in failure of drive or filter components.

2. INTRODUCTION

The purpose of the manual is to properly specify, size, and install the SineWave Guardian.

For most current information, please refer to website
http://www.mtecorp.com/products/sinewave-guardian/

SineWave Guardian Filters transform the output of Variable Frequency Drives (VFDs) to a near perfect sinusoidal waveform for the best level of motor protection. MTE's unique, patent-pending design offers high performance with smaller size and better efficiency than traditional LC Filters.

Receipt & Repair Statement

Upon Receipt of this Filter:

The SineWave Guardian motor protection filter has been subjected to demanding factory tests before shipment. Carefully inspect the shipping container for damage that may have occurred in transit. Then unpack the filter and carefully inspect for any signs of damage. Save the shipping container for future transport of the filter.

In the event of damage, please contact and file a claim with the freight carrier involved immediately.

If the equipment is not going to be put into service upon receipt, cover and store the filter in a clean, dry location. After storage, ensure that the equipment is dry and that no condensation or dirt has accumulated on the internal components of the filter before applying power.

Repair/Exchange Procedure

MTE Corporation requires a Return Material Authorization Number and form before we can accept any filters that qualify for return or repair. If problems or questions arise during installation, setup, or operation of the filter, please contact MTE for assistance at:

Toll Free: 1-800-455-4MTE (1-800-455-4683)

International Tel: 262-253-8200

Fax: 262-253-8222

3. HOW TO SELECT

Selection Guide

MTE SineWave Guardian Motor Protection Filters are designed to provide a sine wave output voltage when driven from PWM inverters with switching frequencies from 2 kHz to 8 kHz. For drive applications, these filters eliminate the problem of motor insulation failures and they also reduce electromagnetic interference by eliminating the high dV/dt associated with inverter output wave forms.

SineWave Guardian Motor Protection Filters are available in Modular, NEMA 1/2, and 3R mechanical configurations.

For inverters feeding isolation transformers select a filter with a current rating equal to or greater than that of the transformer primary current.

Please verify information below for proper selection:

- ☐ **Voltage**: Input voltage from 380V – 480V. See Table 4-1 (p11) for specification.
- ☐ **Current Rating**: Support for 2 Amps – 720 Amps. See Table 4-1 (p11) for Amp breaks.
- ☐ **Switching Frequency**: Support for carrier frequency of 2kHz – 8kHz, see Table 4-1 (p11).
- ☐ **Drive Output Frequency**: Support for 6Hz to 75Hz without derating, >75Hz to 120Hz with derating. See Figure 5-4 (p15) for derating curve.
- ☐ **Temperature**: Maximum ambient temperature, 60C (modular), 55C (enclosed). See Table 4-1 (p11) for specification.
- ☐ **Altitude**: 3,300 feet above sea level without derating. See Figure 5-3 (p15) for derating curve.
- ☐ **Enclosure Type**: Modular, NEMA 1/2 & NEMA 3R, see Enclosures (p12) for enclosure descriptions.
- ☐ Verify the drive output can be configured to Volts per Hz mode.

Part Number Configuration

SWG X _ _ _ _ X

SineWave Guardian

Type

M = Modular
G = General Purpose (NEMA 1/2)
W = Weather (NEMA 3R)

Current Rating

0002 is 2 Amps
0720 is 720 Amps

Voltage Frequency Code

D 380V – 480V

Part Number Selection Tables

Table 3-1: Modular Selection Table

380V Motor KW	460V Motor HP	Filter Amp Rating	Part Number	App. Wt. (lbs.)	Open Magnetics (in.) (H x W x D)	Ref. Fig.	Watts* Loss	3-Phase Capacitor (in.) (H x D) Capacitor Panel (in.) (H x W x D)	Capacitor Ref. Fig.
0.55	0.75	2	**SWGM0002D**	6	4.5 x 4.4 x 2.6	A-1 (p29)	25	7.5 x 2.9	A-84 (p112)
0.75	1.5	3	**SWGM0003D**	8	4.5 x 4.4 x 3.3	A-2 (p30)	45	7.5 x 2.9	A-84 (p112)
2.2	3	5	**SWGM0005D**	12	6.7 x 8.0 x 4.8	A-3 (p31)	75	7.5 x 2.9	A-84 (p112)
3	4	7	**SWGM0007D**	13	6.7 x 8.0 x 5.1	A-4 (p32)	91	7.5 x 2.9	A-84 (p112)
4	5.5	9	**SWGM0009D**	15	6.7 x 8.0 x 5.1	A-5 (p33)	97	7.5 x 2.9	A-84 (p112)
5.5	7.5	12	**SWGM0012D**	13	6.7 x 8.0 x 5.4	A-6 (p34)	127	7.5 x 2.9	A-84 (p112)
7.5	10	17	**SWGM0017D**	20	7.5 x 9.0 x 4.8	A-7 (p35)	130	7.5 x 2.9	A-84 (p112)
11	15	22	**SWGM0022D**	31	8.7 x 10.5 x 6.7	A-8 (p36)	135	7.5 x 2.9	A-84 (p112)
-	20	27	**SWGM0027D**	34	8.7 x 10.5 x 6.7	A-9 (p37)	140	7.5 x 2.9	A-84 (p112)
18.5	25	35	**SWGM0035D**	38	8.9 x 10.5 x 6.7	A-10 (p38)	210	7.5 x 3.9	A-84 (p112)
22	30	45	**SWGM0045D**	43	8.8 x 10.5 x 7.2	A-11 (p39)	225	7.5 x 3.9	A-84 (p112)
-	40	55	**SWGM0055D**	53	8.8 x 10.5 x 8.2	A-12 (p40)	301	8.3 x 3.9	A-84 (p112)
30	50	65	**SWGM0065D**	62	10.8 x 12.0 x 8.6	A-13 (p41)	310	8.3 x 4.9	A-84 (p112)
37	60	80	**SWGM0080D**	73	10.8 x 12.0 x 9.0	A-14 (p42)	387	8.3 x 4.9	A-84 (p112)
55	75	110	**SWGM0110D**	105	10.7 x 12.0 x 10.5	A-15 (p43)	395	8.3 x 4.9	A-84 (p112)
-	100	130	**SWGM0130D**	108	10.7 x 12.0 x 11.5	A-16 (p44)	420	8.3 x 4.9	A-84 (p112)
75	125	160	**SWGM0160D**	151	14.5 x 15.3 x 11.3	A-17 (p45)	595	6.9 x 16.3 x 7.6	A-76 (p104)
110	150	200	**SWGM0200D**	158	14.5 x 15.3 x 11.8	A-18 (p46)	650	6.9 x 16.3 x 7.6	A-77 (p105)
132	200	250	**SWGM0250D**	215	14.5 x 15.3 x 13.8	A-19 (p47)	775	6.9 x 16.3 x 7.6	A-78 (p106)
160	250	305	**SWGM0305D**	249	14.6 x 15.3 x 14.9	A-20 (p48)	945	6.9 x 16.3 x 7.6	A-79 (p107)
200	300	365	**SWGM0365D**	299	14.6 x 15.3 x 15.3	A-21 (p49)	1,050	6.9 x 16.3 x 7.6	A-80 (p108)
220	350	415	**SWGM0415D**	313	14.6 x 15.3 x 15.0	A-22 (p50)	1,137	6.9 x 16.3 x 7.6	A-81 (p109)
280	450	515	**SWGM0515D**	348	15.0 x 15.3 x 16.3	A-23 (p51)	1,235	10.7 x 16.3 x 7.6	A-82 (p110)
335	500	600	**SWGM0600D**	471	18.3 x 24.0 x 14.6	A-24 (p52)	2,225	7.9 x 16.3 x 7.6	A-83 (p111)
375	600	720	**SWGM0720D**	664	18.2 x 24.0 x 14.6	A-25 (p53)	2,300	6.9 x 16.3 x 7.6 7.9 x 16.3 x 7.6	A-80 (p108) A-83 (p111)

*Based on 60Hz output frequency, 2kHz carrier frequency at full load.

Part Number Selection Tables

Table 3-2: Enclosed NEMA 1/2 Selection Table

380V Motor KW	460V Motor HP	Filter Amp Rating	Part Number	App. Wt. (lbs.)	Enclosure	Size (In.) (HXWXD)	Ref. Fig.
0.55	0.75	2	**SWGG0002D**	20	CAB-13V	13.8 x 13 x 13	A-26 (p54)
0.75	1.5	3	**SWGG0003D**	21	CAB-13V	13.8 x 13 x 13	A-27 (p55)
2.2	3	5	**SWGG0005D**	25	CAB-13V	13.8 x 13 x 13	A-28 (p56)
3	4	7	**SWGG0007D**	27	CAB-13V	13.8 x 13 x 13	A-29 (p57)
4	5.5	9	**SWGG0009D**	27	CAB-13V	13.8 x 13 x 13	A-30 (p58)
5.5	7.5	12	**SWGG0012D**	27	CAB-13V	13.8 x 13 x 13	A-31 (p59)
7.5	10	17	**SWGG0017D**	34	CAB-13V	13.8 x 13 x 13	A-32 (p60)
11	15	22	**SWGG0022D**	79	CAB-17V	24 x 17 x 17	A-33 (p61)
-	20	27	**SWGG0027D**	82	CAB-17V	24 x 17 x 17	A-34 (p62)
18.5	25	35	**SWGG0035D**	86	CAB-17V	24 x 17 x 17	A-35 (p63)
22	30	45	**SWGG0045D**	145	CAB-17V	24 x 17 x 17	A-36 (p64)
-	40	55	**SWGG0055D**	101	CAB-17V	24 x 17 x 17	A-37 (p65)
30	50	65	**SWGG0065D**	136	CAB-17AP2	34 x 17.8 x 21	A-38 (p66)
37	60	80	**SWGG0080D**	147	CAB-17AP2	34 x 17.8 x 21	A-39 (p67)
55	75	110	**SWGG0110D**	179	CAB-17AP2	34 x 17.8 x 21	A-40 (p68)
-	100	130	**SWGG0130D**	182	CAB-17AP2	34 x 17.8 x 21	A-41 (p69)
75	125	160	**SWGG0160D**	317	CAB-26AP2	51.3 x 27.7 x 25	A-42 (p70)
110	150	200	**SWGG0200D**	324	CAB-26AP2	51.5 x 27.7 x 25	A-43 (p71)
132	200	250	**SWGG0250D**	381	CAB-26AP2	51.5 x 27.7 x 25	A-44 (p72)
160	250	305	**SWGG0305D**	415	CAB-26AP2	51.5 x 27.7 x 25	A-45 (p73)
200	300	365	**SWGG0365D**	465	CAB-26AP2	51.5 x 27.7 x 25	A-46 (p74)
220	350	415	**SWGG0415D**	479	CAB-26AP2	51.5 x 27.7 x 25	A-47 (p75)
280	450	515	**SWGG0515D**	619	CAB-42AP2	87.6 x 44 x 31	A-48 (p76)
335	500	600	**SWGG0600D**	744	CAB-42AP2	87.6 x 44 x 31	A-49 (p77)
375	600	720	**SWGG0720D**	937	CAB-42AP2	87.6 x 44 x 31	A-50 (p78)

Part Number Selection Tables

Table 3-3: Enclosed NEMA 3R Selection Table

380V Motor KW	460V Motor HP	Filter Amp Rating	Part Number	App. Wt. (lbs.)	Enclosure	Size (In.) (HXWXD)	Ref. Fig.
0.55	0.75	2	**SWGW0002D**	62	CAB-12AP3	24 x 12.5 x 22.9	A-51 (p79)
0.75	1.5	3	**SWGW0003D**	64	CAB-12AP3	24 x 12.5 x 22.9	A-52 (p80)
2.2	3	5	**SWGW0005D**	68	CAB-12AP3	24 x 12.5 x 22.9	A-53 (p81)
3	4	7	**SWGW0007D**	68	CAB-12AP3	24 x 12.5 x 22.9	A-54 (p82)
4	5.5	9	**SWGW0009D**	70	CAB-12AP3	24 x 12.5 x 22.9	A-55 (p83)
5.5	7.5	12	**SWGW0012D**	68	CAB-12AP3	24 x 12.5 x 22.9	A-56 (p84)
7.5	10	17	**SWGW0017D**	75	CAB-12AP3	24 x 12.5 x 22.9	A-57 (p85)
11	15	22	**SWGW0022D**	87	CAB-12AP3	24 x 12.5 x 22.9	A-58 (p86)
-	20	27	**SWGW0027D**	90	CAB-12AP3	24 x 12.5 x 22.9	A-59 (p87)
18.5	25	35	**SWGW0035D**	94	CAB-12AP3	24 x 12.5 x 22.9	A-60 (p88)
22	30	45	**SWGW0045D**	145	CAB-12AP3	24 x 12.5 x 22.9	A-61 (p89)
-	40	55	**SWGW0055D**	108	CAB-12AP3	24 x 12.5 x 22.9	A-62 (p90)
30	50	65	**SWGW0065D**	143	CAB-17AP3	34 x 17.8 x 26	A-63 (p91)
37	60	80	**SWGW0080D**	154	CAB-17AP3	34 x 17.8 x 26	A-64 (p92)
55	75	110	**SWGW0110D**	187	CAB-17AP3	34 x 17.8 x 26	A-65 (p93)
-	100	130	**SWGW0130D**	189	CAB-17AP3	34 x 17.8 x 26	A-66 (p94)
75	125	160	**SWGW0160D**	330	CAB-26AP3	51.3 x 27.7 x 30	A-67 (p95)
110	150	200	**SWGW0200D**	337	CAB-26AP3	51.3 x 27.7 x 30	A-68 (p96)
132	200	250	**SWGW0250D**	394	CAB-26AP3	51.3 x 27.7 x 30	A-69 (p97)
160	250	305	**SWGW0305D**	428	CAB-26AP3	51.3 x 27.7 x 30	A-70 (p98)
200	300	365	**SWGW0365D**	478	CAB-26AP3	51.3 x 27.7 x 30	A-71 (p99)
220	350	415	**SWGW0415D**	492	CAB-26AP3	51.3 x 27.7 x 30	A-72 (p100)
280	450	515	**SWGW0515D**	624	CAB-42AP3	87.6 x 44 x 40	A-73 (p101)
335	500	600	**SWGW0600D**	748	CAB-42AP3	87.6 x 44 x 40	A-74 (p102)
375	600	720	**SWGW0720D**	941	CAB-42AP3	87.6 x 44 x 40	A-75 (p103)

4. PRODUCT SPECIFICATIONS

Performance Specifications

Table 4-1: Performance Specifications

Service Load Condition	**Conventional 3 phase motors operating in volts per Hertz mode** **Standard step-up transformer**
Voltage	**380V - 480V +/- 10%**
Input Voltage Wave Form	**PWM**
Harmonic Voltage Distortion	**5% maximum @ 2kHz**
Inverter Switching Frequency	**2kHz – 8kHz**
Inverter Operating Frequency	**6Hz to 75Hz,** **>75Hz to 120Hz with derating**
Maximum Ambient Temperature	**-40C to +60C** Modular Filter **-40C to +55C** Enclosed Filter **-40C to +90C** Storage
Insertion Loss (Voltage)	**6% maximum @ 60Hz**
Efficiency	**>98%**
Current range	**2A – 720A**
Available form factors	**Modular** **NEMA 1 & 2** **NEMA 3R**
Altitude without derating	**3,300 feet above sea level**
Maximum Motor Lead Length	**15,000 feet**
Relative Humidity	**0% to 95% non-condensing**
Current Rating	**100% RMS** Continuous **150% for 1 minute** Intermittent
Audible Noise	**75dB A at 1 meter**

Filter does not mitigate any DC bus ripple that may be present.

Enclosures

MTE enclosures are designed to provide a degree of protection for electrical components and prevent incidental personnel contact with the enclosed equipment. Depending on the enclosure selected, these enclosures meet the requirements of NEMA 1, 2 or 3R.

An approximate cross reference guide between NEMA, UL, CSA and IEC enclosure follows.

Type 1 NEMA / IEC IP20 Enclosure**:**

Are designed for indoor use and will provide protection against contact with the enclosed equipment.

Type 2 NEMA / IEC IP20 Enclosure:

Are designed for indoor use and will provide protection against contact with the enclosed equipment and provide a degree of protection against limited amounts of falling water and dirt.

Type 3R NEMA / IEC IP21 Enclosure:

Are designed for outdoor use primarily to provide protection against contact with the enclosed equipment and provide a degree of protection against falling rain sleet and external ice formation.

Agency Approvals

UL and cUL listed to UL508 Type MX and CSA-C22.2 No 14-95
File E180243

Warranty

Three years from the date of shipment. See www.mtecorp.com for details.

Over Temperature Switch

Table 4-2: Over Temperature Switch

NC Switch opens at 180 Deg. +/- 5 Deg. C		
Current Amps	**Voltage**	**Contact Load**
6	120 AC	Resistive Loads
3	120 AC	Inductive Loads
3	240 AC	Resistive Loads
2.5	240 AC	Inductive Loads
8	12 VDC	Resistive Loads
4	24 VDC	Resistive Loads

MTE highly recommends the use of the over temperature switch to prevent damage to the filter in rare instances of overheating from abnormal operating conditions.

5. TYPICAL PERFORMANCE DATA

Voltage Waveforms

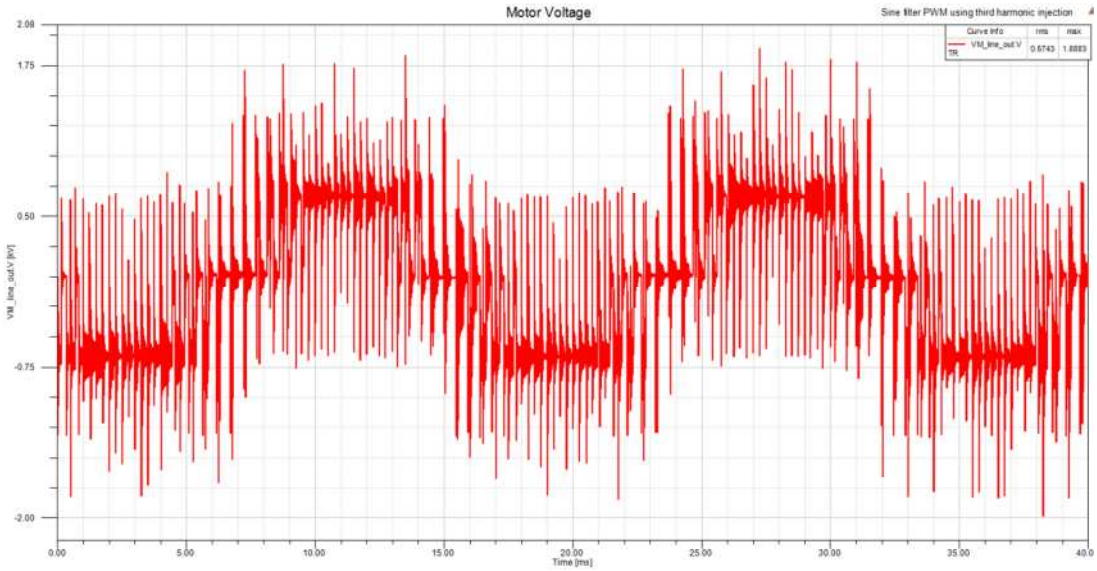

Figure 5-1: Output Voltage before SineWave Guardian

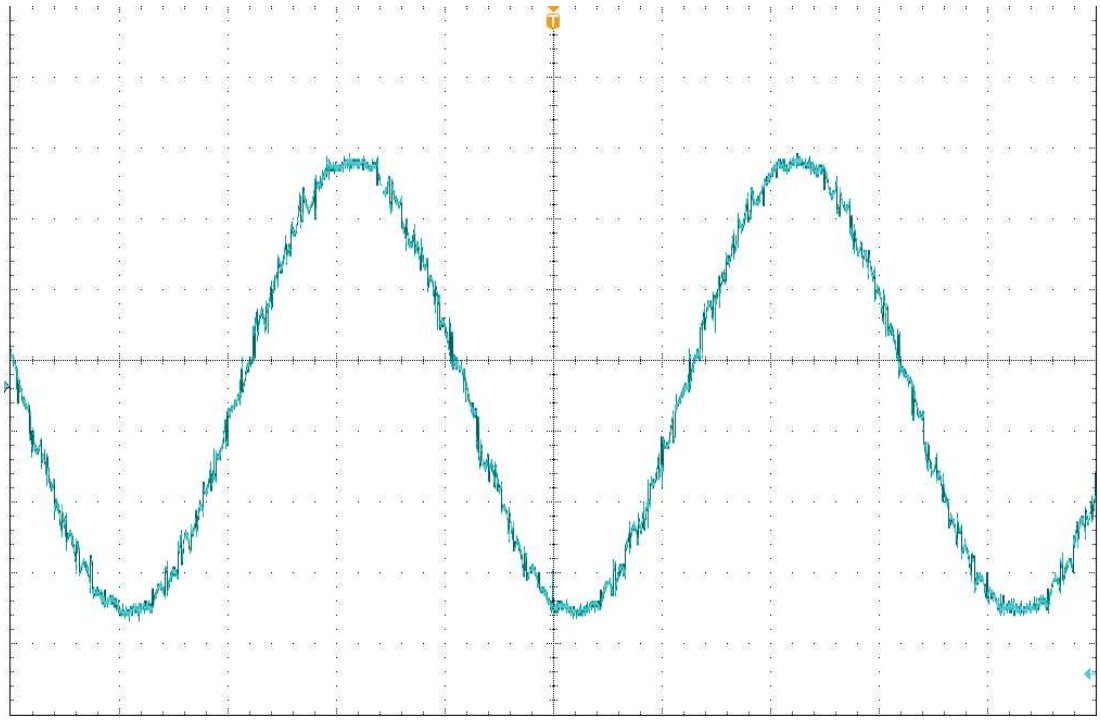

Figure 5-2: Output Voltage after SineWave Guardian

Filter Efficiency + Watt loss

Table 5-1: Filter Efficiency & Watt Loss

Maximum Output Amps RMS/Filter Current Rating Amps RMS	Efficiency (Typical) (%)	Power Dissipation (Typical) (Watts*)
2	98.8	25
3	98.0	45
5	98.2	75
7	98.3	91
9	98.7	97
12	98.7	127
17	99.1	130
22	99.3	135
27	99.4	140
35	99.3	210
45	99.4	225
55	99.3	301
65	99.4	310
80	99.4	387
110	99.6	395
130	99.6	420
160	99.5	595
200	99.6	650
250	99.6	775
305	99.6	945
365	99.7	1,050
415	99.7	1,137
515	99.7	1,235
600	99.5	2,225
720	99.6	2,300

*Based on 60Hz output frequency, 2kHz carrier frequency at full load.

Attitude Derating

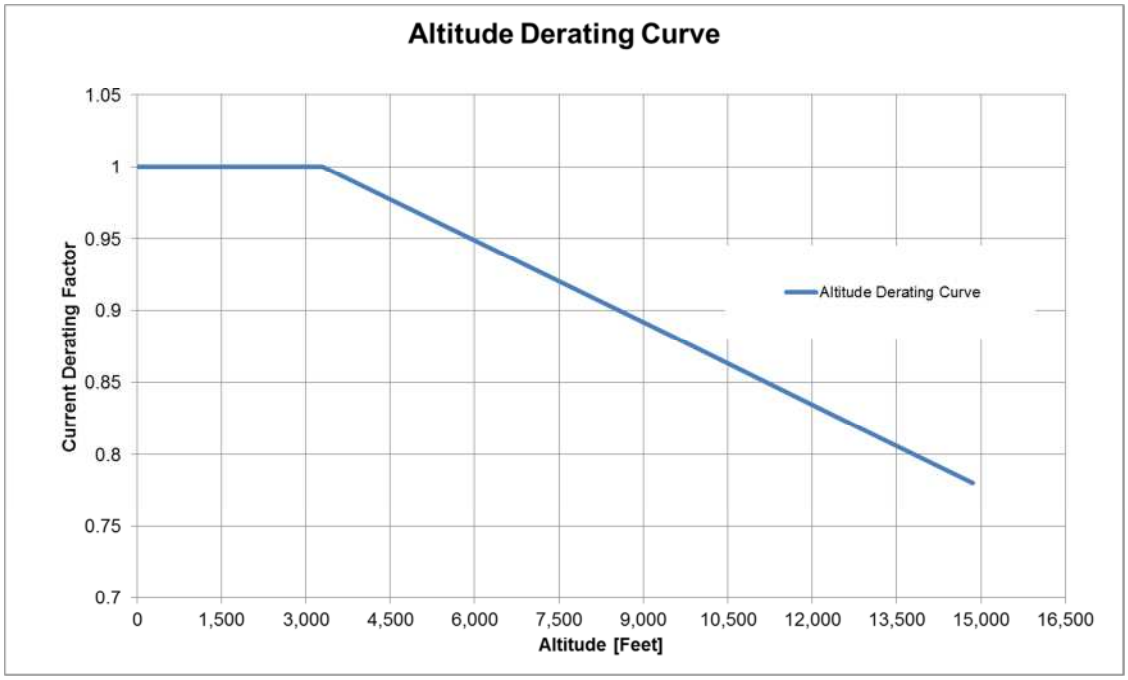

Figure 5-3: Attitude Derating Curve

Motor Frequency Derating

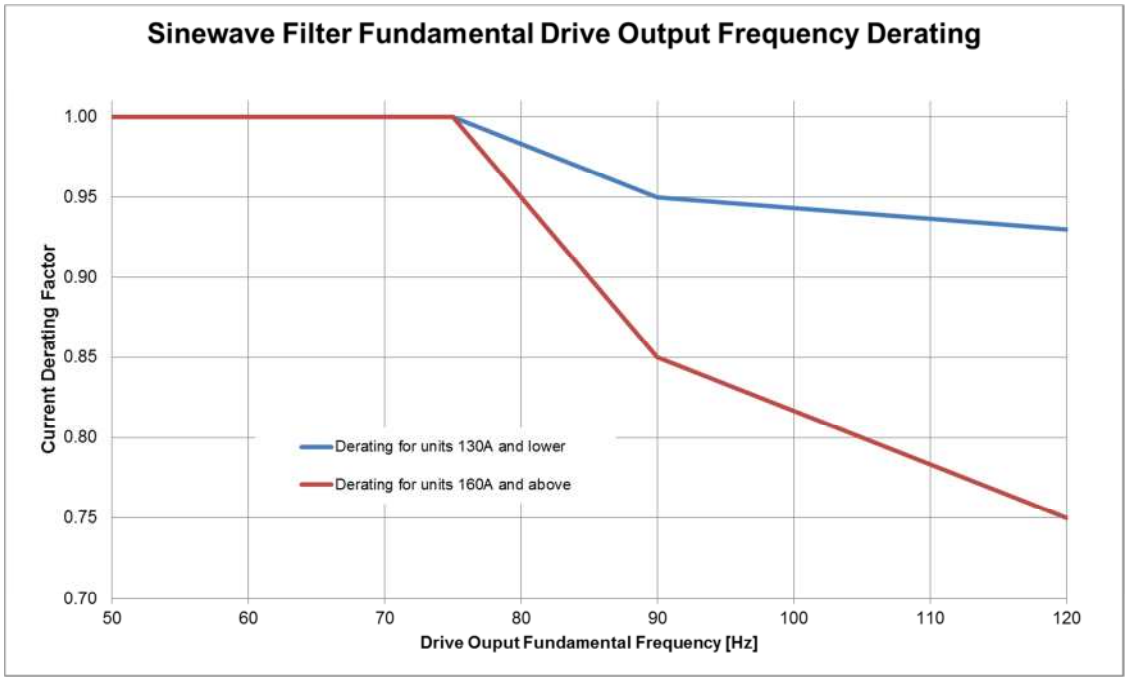

Figure 5-4: Motor Frequency Derating

6. HOW TO INSTALL

Installation Checklist

WARNING	**Prior to installation, please refer to all general warnings on page 4. Failure to practice this can result in body injury!**
WARNING	**Input and output wiring to the filter should be performed by authorized personnel in accordance with NEC and all local electrical codes and regulations.**
WARNING	The filter is designed for use with copper conductors with a minimum temperature rating of 75 degrees C.

Verify that the rating of the filter is compatible with the drive to which it is to be connected. Follow all detailed drive manufacturer installation and safety instructions. Drive and load cable selection / placement should be in accordance with the requirements of the NEC and all local electrical codes and regulations

The typical interconnection diagrams that follow are shown for a motor load but the load can be either a motor or a transformer.

- For modular filters interconnection between the filter, motor and the drive is shown in Figure 6-1 (p18).

- For filters supplied in general purpose NEMA1/2 and 3R cabinets, interconnection between the filter, motor and the drive is shown in Figure 6-2 (p19).

Refer to the drive user manual for instructions on interconnecting the drive and motor and the correct start-up procedures for the drive. Do not use auto-tune with filter.

Table 6-1 (p22) lists the wire range and terminal torque requirements for the power input and output connections and capacitor/capacitor panel connections (modular only).

Use the cable recommended by the drive manufacturer to connect the drive to the filter and the filter to the motor. Make certain that the selected cable size conforms to the requirements of the National Electric Code and all local codes.

Grounding

WARNING	The filter must always be grounded with a grounding conductor connected to ground terminals.
WARNING	For modular units, ensure a 2” X 2” area is cleaned of paint and varnish on lower mounting bracket for ground connection.

For cable shield grounding follow the drive manufactures recommendations.

Over Temperature Interlock

An over temperature interlock circuit should be used in conjunction with thermal switch to turn off the drive to prevent filter damage due to abnormal operating conditions. The temperature switch is normally closed and will open when an internal reactor temperature of 180°C is reached. See Table 4-2 (p12) for contact rating information and the drive user manual for interconnection information.

Location & Spacing

Modular filters are designed for mounting in the customer’s enclosure. Include the power dissipation of the filter along with all the other components located in the panel to determine the internal temperature rise and cooling requirements of the enclosure. A general guideline is to allow a side clearance of four (4) inches and a vertical clearance of six (6) inches for proper heat dissipation and access within the enclosure. Clearances may be less if proper ventilation exists. Filter components must operate within temperatures specified in this manual or filter operating life will be compromised. Also be aware of minimum electrical clearances as defined by the appropriate system safety standard(s). Modular SineWave filters generate heat and should be positioned away from heat sensitive components. Ensure that proper panel orientation is maintained. Keep the capacitors away from reactor and resistor heat flow. Avoid locations where the filter would be subjected to excessive vibrations. Locate the filter as close to the inverter as possible.

General purpose NEMA 1, 2 and 3R enclosed filters are designed for floor mounting in an environment suitable for the enclosure type. Do not install in or near a corrosive environment. Avoid locations where the filter would be subjected to excessive vibrations. Allow a minimum side and back clearance of eight (8) inches for proper ventilation. Also consider spacing required for accessibility. Locate the filter as close to the inverter as possible.

Mechanical Mounting

Please refer to Part Number Selection Tables for mounting locations.

- **Modular**: Table 3-1 (p8)
- **Enclosed NEMA 1/2**: Table 3-2 (p9)
- **Enclosed NEMA 3R**: Table 3-3 (p10)

Modular Unit Interconnection Diagram

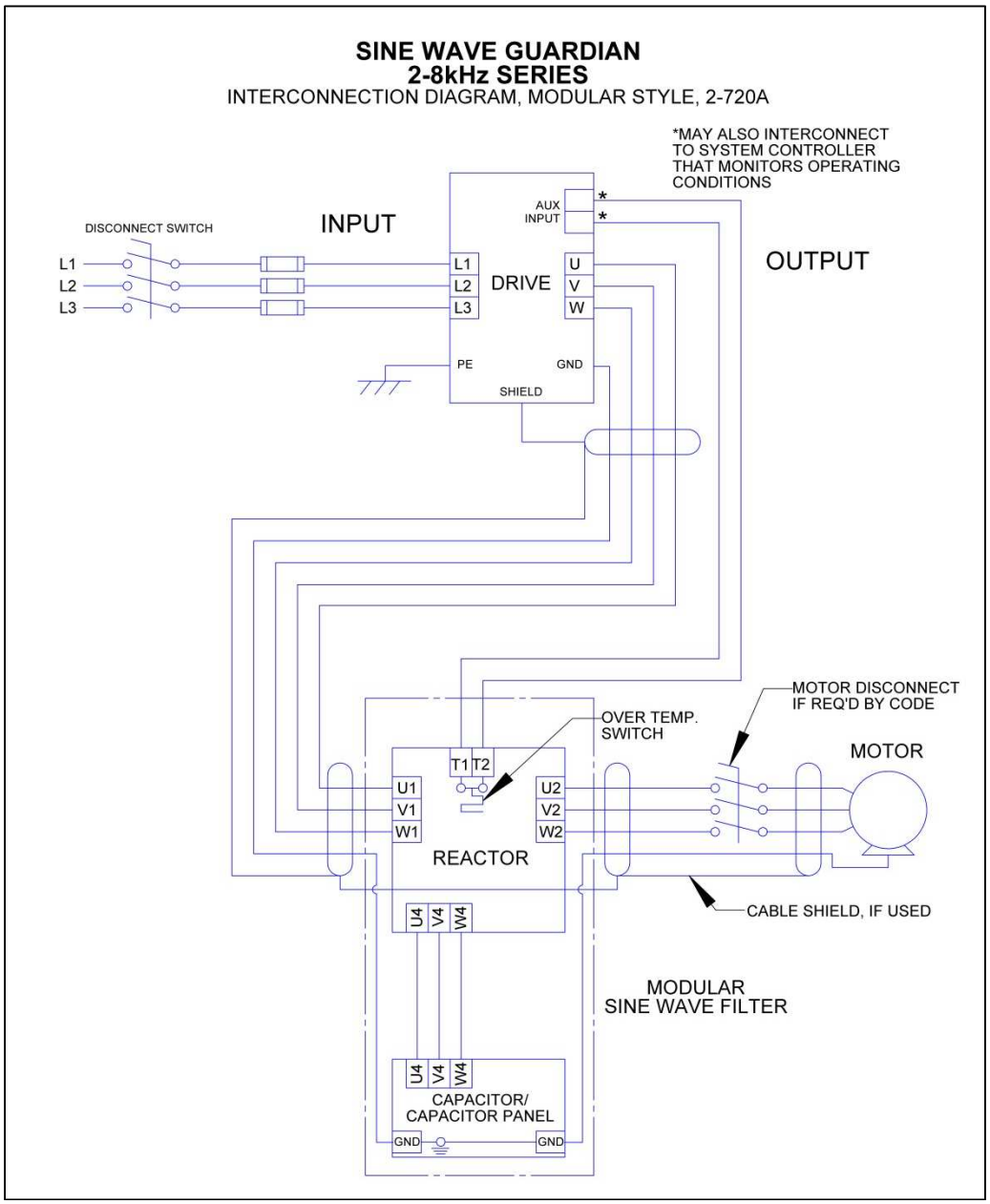

Figure 6-1: Modular Interconnection

Enclosed Unit Interconnection Diagram

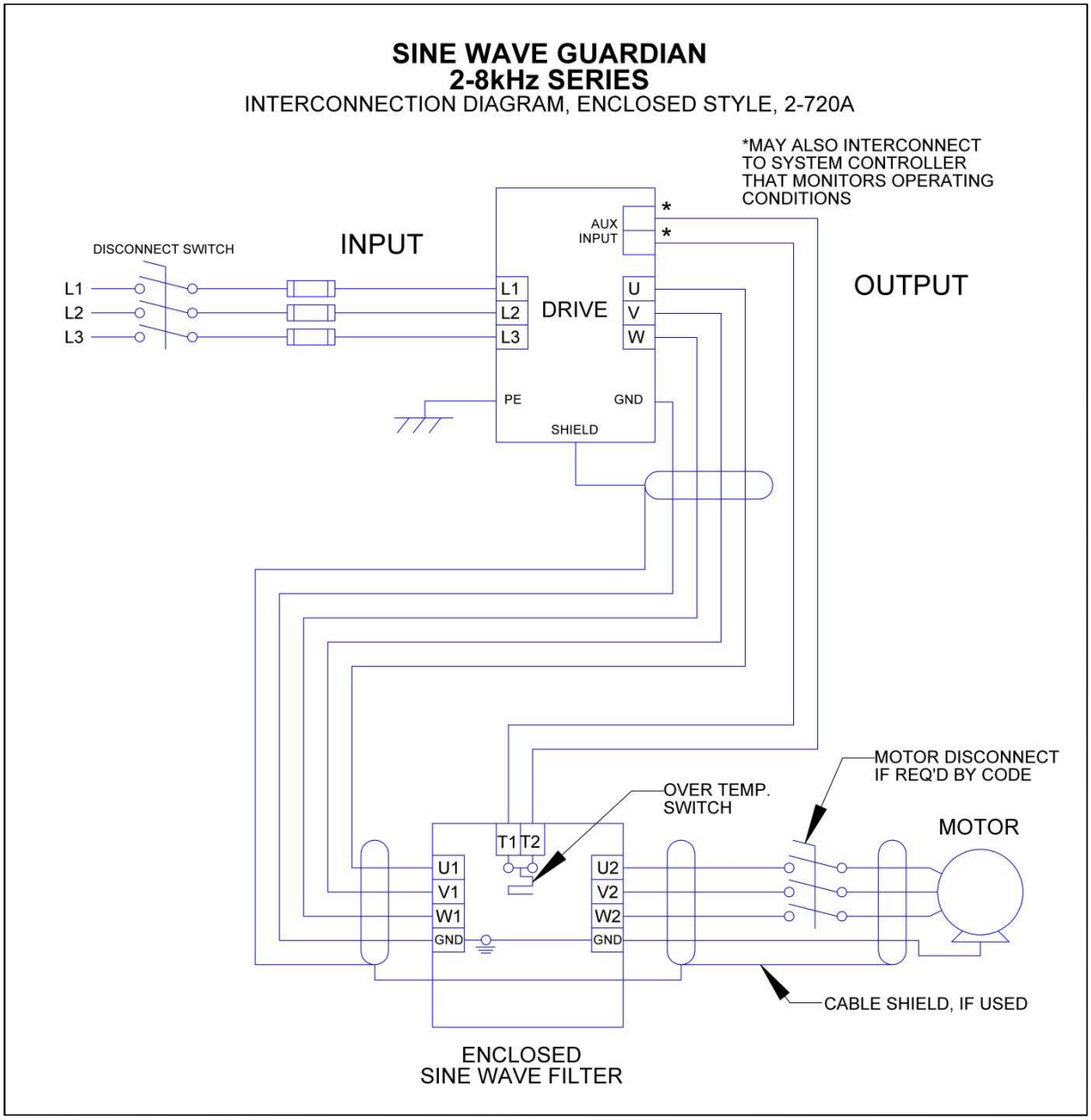

Figure 6-2: Enclosed Interconnection

Basic Schematic Diagram

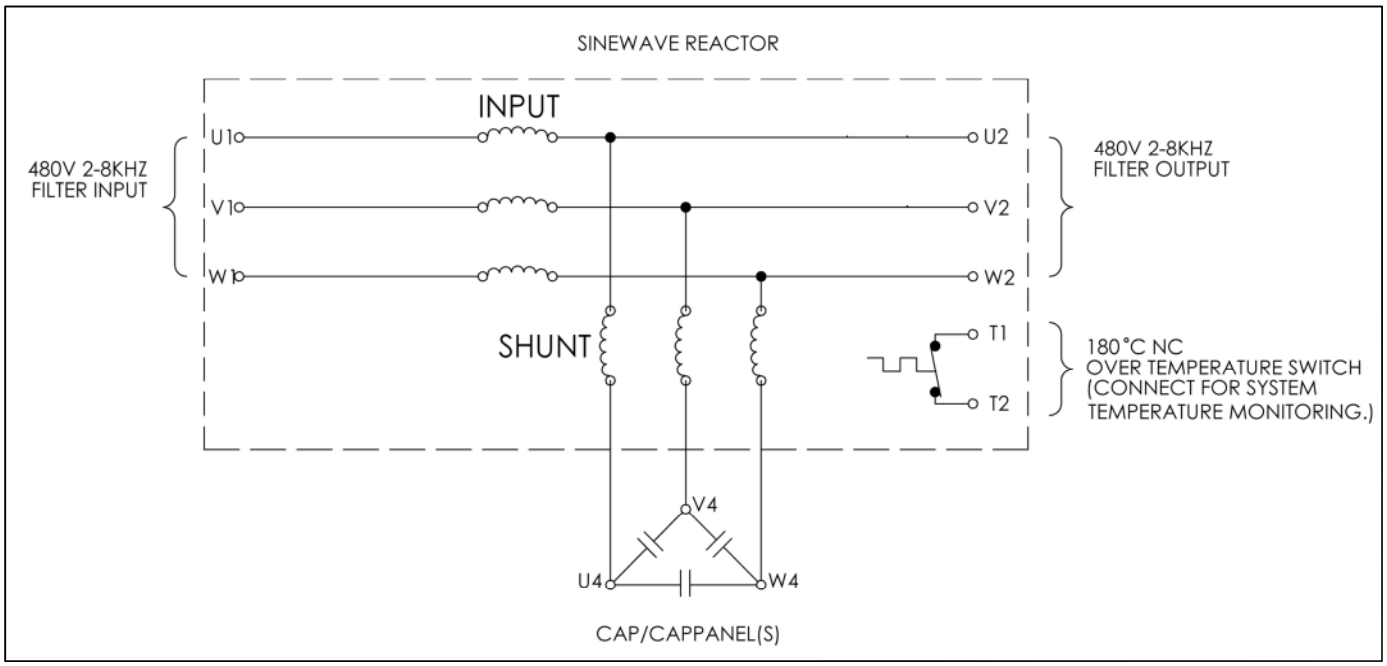

Figure 6-3: Basic Schematic Diagram

Isolation Transformer Diagram

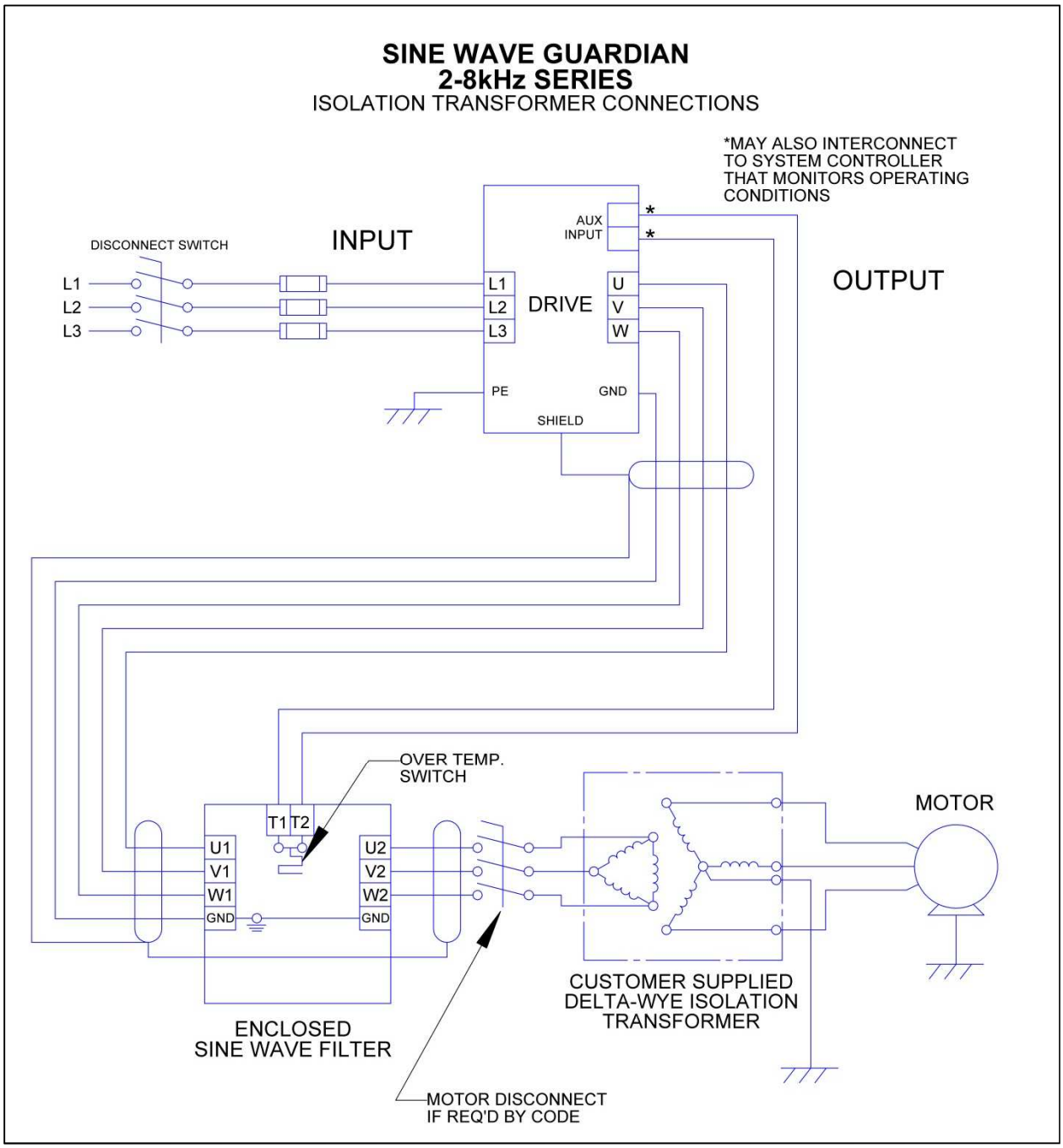

Figure 6-4: Isolation Transformer

Torque Ratings

Table 6-1: Torque Ratings

Filter Rating (Amps)	SWG Terminals			Cap-panel Terminals U4-V4-W4		
	Input /Output Power U1-V1-W1 / U2-V2-W2		U4-V4-W4 interconnect Cap-panel	Capacitor/ Cap-panel Part Number	Minimum Interconnect Wire Gauge (AWG)	Terminal Torque (in-lbs.)
	Recommended Minimum Wire Size (AWG)	Terminal Torque (in-lbs.)	Terminal Torque (in-lbs.)			
2	14	16	16	CAP-501SW	14	23
3	14	16	16	CAP-502SW	14	23
5	14	16	16	CAP-503SW	14	23
7	14	16	16	CAP-504SW	14	23
9	14	16	16	CAP-505SW	14	23
12	14	16	16	CAP-506SW	14	23
17	12	16	16	CAP-507SW	14	23
22	10	16	16	CAP-508SW	14	23
27	10	N/A	16	CAP-509SW	14	23
35	8	N/A	16	CAP-510SW	14	23
45	8	16	16	CAP-511SW	14	23
55	6	N/A	16	CAP-512SW	14	23
65	6	N/A	16	CAP-513SW	14	23
80	4	N/A	N/A	CAP-514SW	12	23
110	2	N/A	N/A	CAP-515SW	10	23
130	1	N/A	N/A	CAP-516SW	10	23
160	4 (2x) or 2/0	N/A	N/A	CAPPANEL-604	8	60
200	3 (2x) or 1/0	N/A	N/A	CAPPANEL-605	8	60
250	1 (2x) or 250K CMIL	N/A	N/A	CAPPANEL-606	6	60
305	2/0 (2x)	N/A	N/A	CAPPANEL-607	4	60
365	3/0 (2x)	N/A	N/A	CAPPANEL-608	4	60
415	4/0 (2x)	N/A	N/A	CAPPANEL-609	3	60
515	300 MCM (2x)	N/A	N/A	CAPPANEL-610	2	60
600	400K CMIL (2x)	N/A	N/A	CAPPANEL-611	1/0	60
720	500K CMIL (2x)	N/A	N/A	CAPPANEL-608	4	60
			N/A	CAPPANEL-611	1/0	60

Note: Cap-panel interconnect wiring specification according to UL508 75° C Table.
Note: To prevent flexing or bending of the coil windings attached to SWG reactor use appropriate strain relief to prevent stress on terminals. For flat copper terminal tabs, use two wrenches to tighten customer provided cable mounting hardware.
Notes: Refer to reference drawings for termination wire ranges.

7. START UP

Startup Checklist

Safety Precautions

Before startup, observe the following warnings and instructions:

WARNING	**Internal components of the filter are at line potential when the filter is connected to the drive. This voltage is extremely dangerous and may cause death or severe injury if you come in contact with it.**
WARNING	Remove all power to the SineWave filter in compliance to standardized 26 CFR 1920.147 lockout/tagout policies. After disconnecting the utility power, wait at least 5 minutes before doing any work on the filter connections. After removing power, allow at least five minutes to elapse and verify that the capacitors have discharged to a safe level before contacting internal components. Connect a DC voltmeter across the capacitor terminals and ensure that the voltage is at a safe level.
WARNING	**Use extreme caution to avoid contact with line voltage when checking for power. INJURY OR DEATH MAY RESULT IF SAFETY PRECAUTIONS ARE NOT OBSERVED.**
Caution	Prior to start up; confirm the drive operation mode is property set (Volts per Hertz). Please consult drive manual/manufacturer to configure proper parameters. Failure to do so may result in failure of drive or filter components.
Caution	**Damage to the filter may occur if the output frequency is not set between 2 kHz and 8 kHz. Optimum output frequency is 2kHz to 3kHz.**
Caution	MTE recommends 10 seconds as an initial starting point for motor ramp time and that customers examine the actual inrush and ratings of their drive system. Inrush current seen at the drive from the filter that can easily be overcome by changing the motor ramp time.

Sequence of Operation

1. Read and follow safety precautions. Including those of drive manufactures.
2. Verify the proper wiring of the filter
    a. U1-V1-W1 : Input wiring and U2-V2-W2 Output wiring
    b. U4-V4-W4 : Capacitor/Capacitor Panel wiring (Modular units only)
3. Prior to start-up, conform the drive operation mode is properly set (Volts per Hertz). Please consult drive manual/manufacturer to configure proper parameters. Failure to do so may result in failure of drive or filter components.
4. MTE recommends 10 seconds as an initial starting point for motor ramp time and that customers examine the actual inrush and ratings of their drive system. Inrush current seen at the drive from the filter that can easily be overcome by changing the motor ramp time.
5. Ensure that all filter components are properly connected to ground.
    a. For modular units, ensure a 2” X 2” area is cleaned of paint and varnish on lower mounting bracket for ground connection.
6. Check that moisture has not condensed on the filter components. If moisture is present, do not proceed with startup until the moisture has been removed.
7. Refer to the drive user manual for the drive startup procedure. Observe all safety instructions in the drive user manual.
8. Disconnect filter output terminals from the motor.
9. Set the drive switching frequency between 2 kHz and 8 kHz. Refer to the drive user manual.

8. TROUBLESHOOTING

WARNING	**INJURY OR DEATH MAY RESULT IF THE DRIVE SAFETY PRECAUTIONS ARE NOT OBSERVED.**
WARNING	**When properly installed, this equipment has been designed to provide maximum safety for operating personnel.** **However, hazardous voltages and elevated temperatures exist within the confines of the enclosure. Servicing should therefore be performed by qualified personnel only and in accordance with OSHA Regulations.**
WARNING	**High voltage is used in the operation of this filter. Use Extreme cautio n to avoid contact with high voltage when operating, installing or repairing this filter. INJURY OR DEATH MAY RESULT IF SAFETY PRECAUTIONS ARE NOT OBSERVED.**
Caution	After removing power, allow at least five minutes to elapse and verify that the capacitors have discharged to a safe level before contacting internal components. Connect a DC voltmeter across the capacitor terminals or terminals U1, V1or V1, W1 and ensure that the voltage is at a safe level.

To aid in troubleshooting, two interconnection diagrams, Modular Unit Interconnection Diagram Figure 6-1 (p18) and Enclosed Unit Interconnection Diagram Figure 6-2 (p19) are included, and this table below list potential problems and solutions.

Table 8-1: Troubleshooting Guide

PROBLEM:	Drive Overcurrent Fault
Possible cause: **Solution:**	Motor ramp –up time too short MTE suggests a ramp time of >5-10 seconds. Consult drive manufacturers manual to configure proper parameters
Possible cause: **Solution:**	Failed or Incorrect Wiring Verify all field and product wiring is correct
Possible cause: **Solution:**	Parameter Compatibility Consult drive manufacturers manual for operating drive with a motor protection filter
Possible cause: **Solution:**	Filter, Drive, Motor Current Ratings Compatible Verify the filter/motor are properly sized for the application
Possible cause: **Solution:**	Motor Winding Fault Verify motor windings and hi pot is necessary
Possible cause: **Solution:**	Cable Failure Verify cable continuity and insulation

PROBLEM:	Excessive Filter Noise
Possible cause: **Solution:**	Mismatched Motor Rating Verify the filter is properly sized for the application
Possible cause: **Solution:**	Capacitors Disconnected or Improperly Wired Verify the proper connection of the capacitors
Possible cause: **Solution:**	Carrier frequency less than 2 kHz Verify the carrier frequency is at least 2 kHz
PROBLEM:	**Temperature Switch Open**
Possible cause: **Solution:**	Mismatched Motor Rating Verify the filter/motor are properly sized for the application
Possible cause: **Solution:**	Capacitors Disconnected or Improperly wired Verify the proper connection of the capacitors
Possible cause: **Solution:**	Carrier Frequency Less Than 2 kHz Verify the carrier frequency is at least 2 kHz
Possible cause: **Solution:**	Excessive Ambient Temperature Ensure the filter is operating within specified ambient temperature below 60°C
PROBLEM:	**Motor Will Not Turn**
Possible cause: **Solution:**	No Power Check fuses or breakers for proper input power
Possible cause: **Solution:**	Motor Incorrectly Wired Check for wiring faults
Possible cause: **Solution:**	Locked Rotor Motor Load Check motor load
Possible cause: **Solution:**	Drive Fault Consult drive manufacturers manual
Possible cause: **Solution:**	Drive Not Configured for Volts / Hertz Consult drive manufacturers manual to configure proper parameters
PROBLEM:	**Motor Running Hot**
Possible cause: **Solution:**	Capacitors Disconnected or Improperly Wired Verify the proper connection of the capacitors
Possible cause: **Solution:**	Overloaded Motor Verify the motor is properly sized for the application

APPENDIX

Reference Drawings

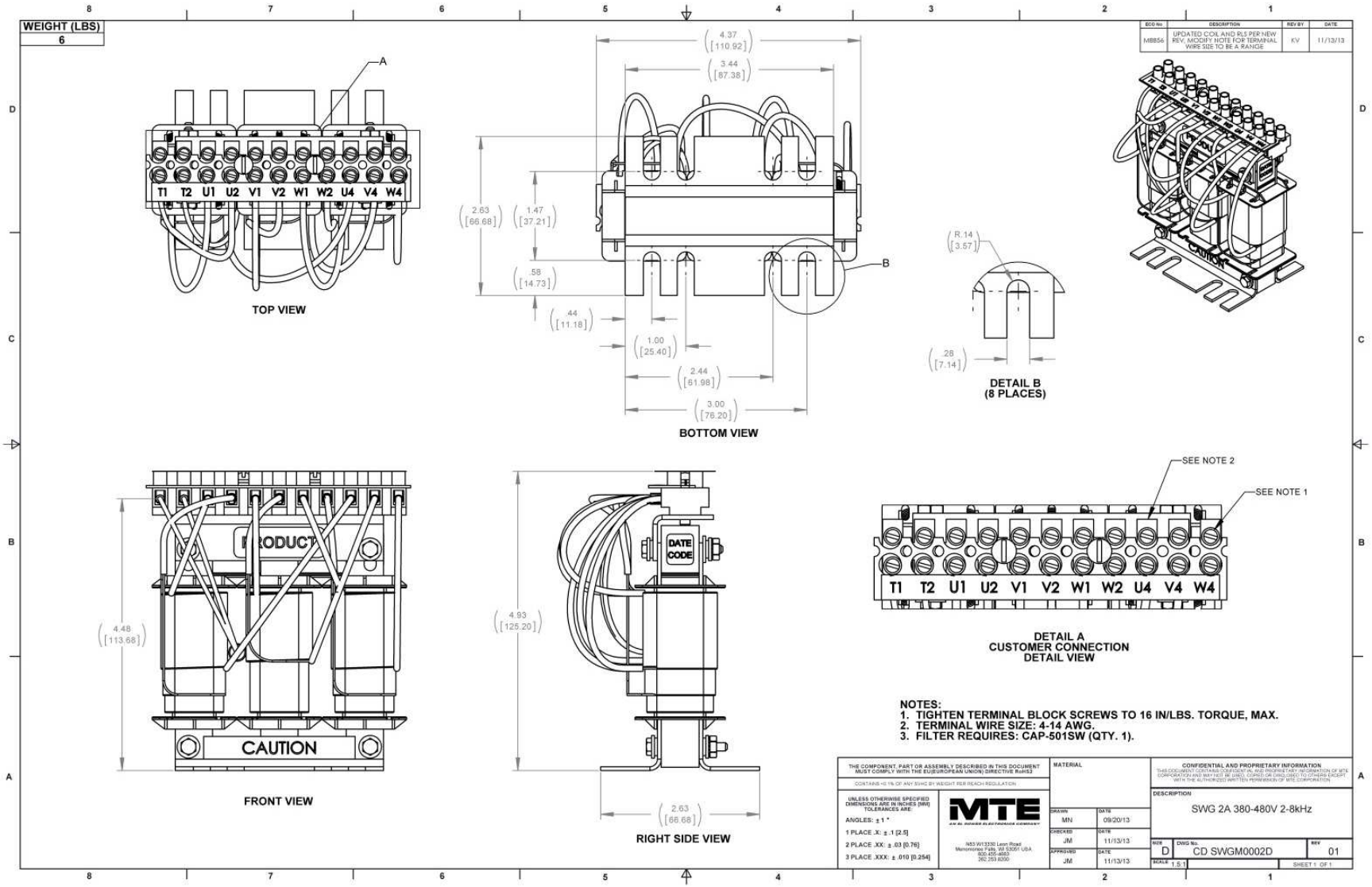

Figure A- 1: SWGM0002D

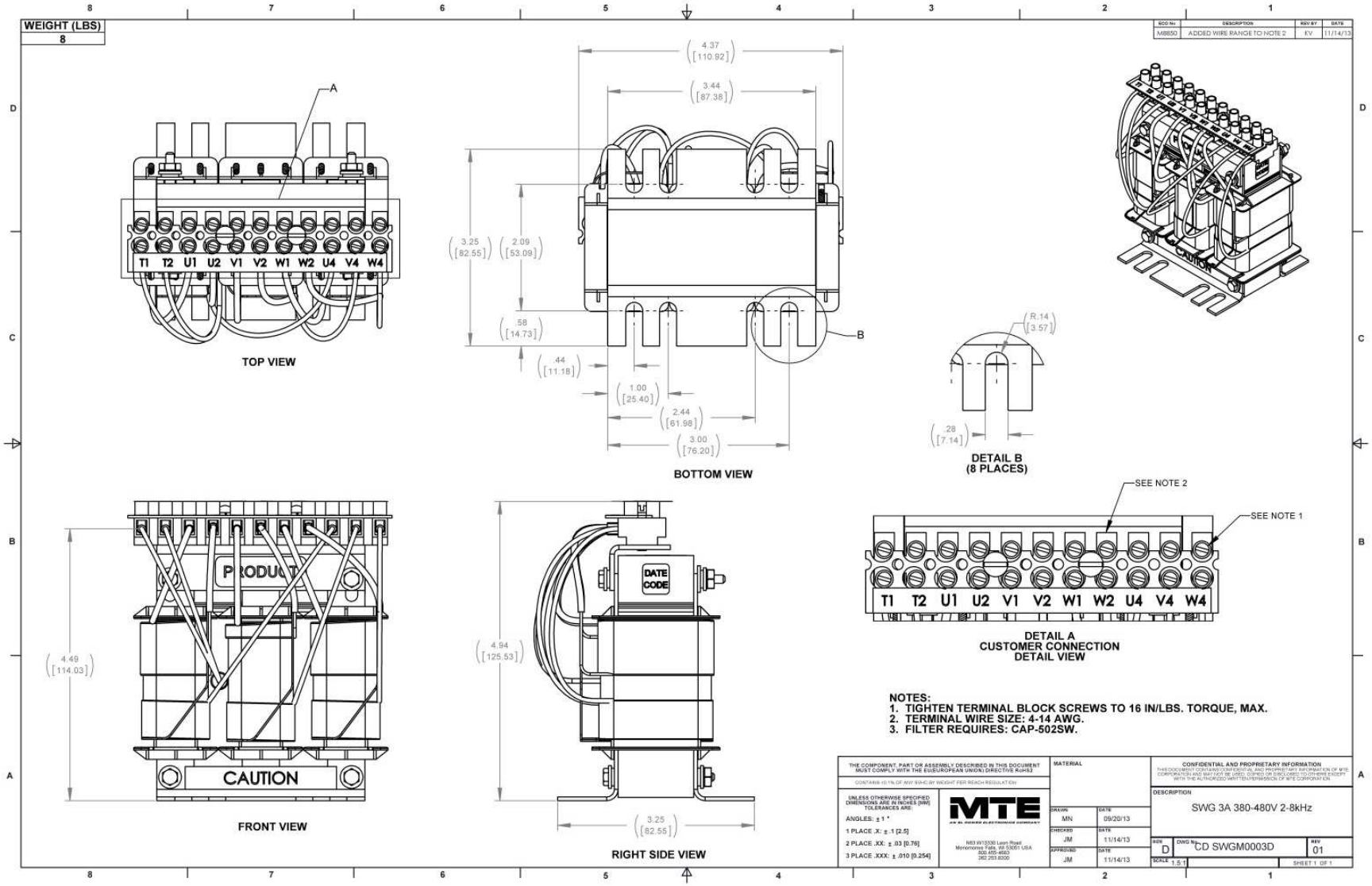

Figure A- 2: SWGM0003D

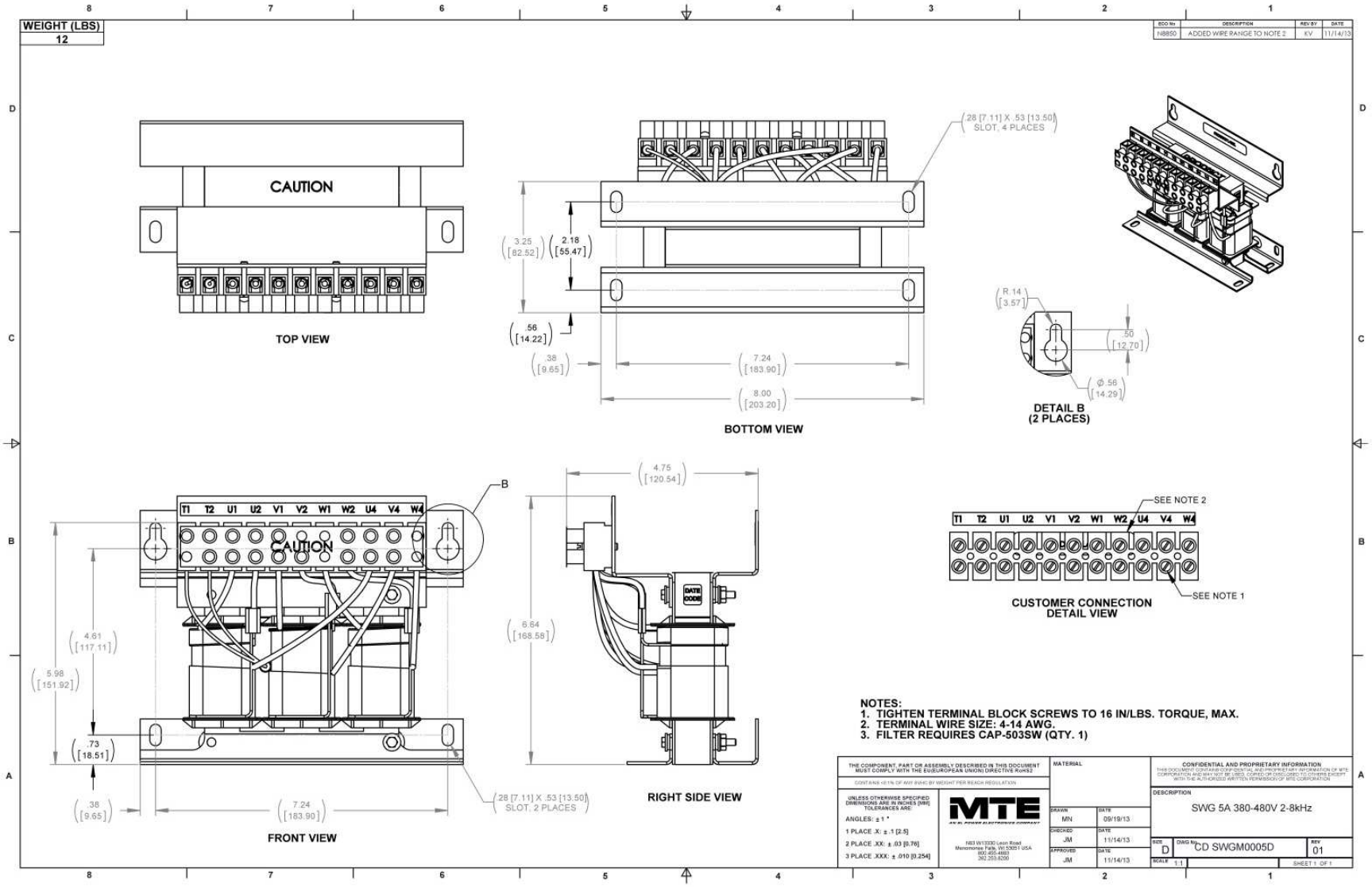

Figure A- 3: SWGM0005D

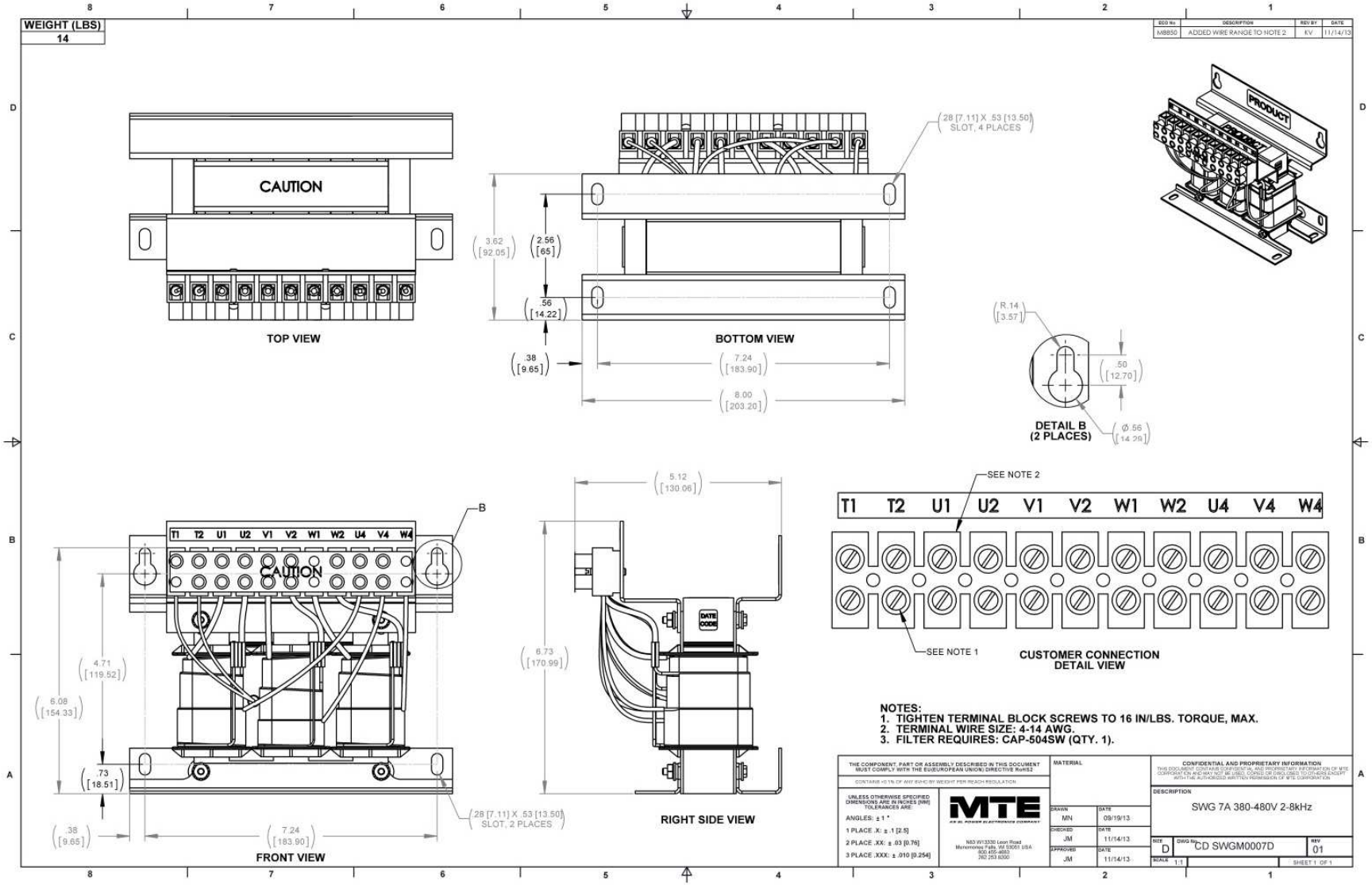

Figure A- 4: SWGM0007D

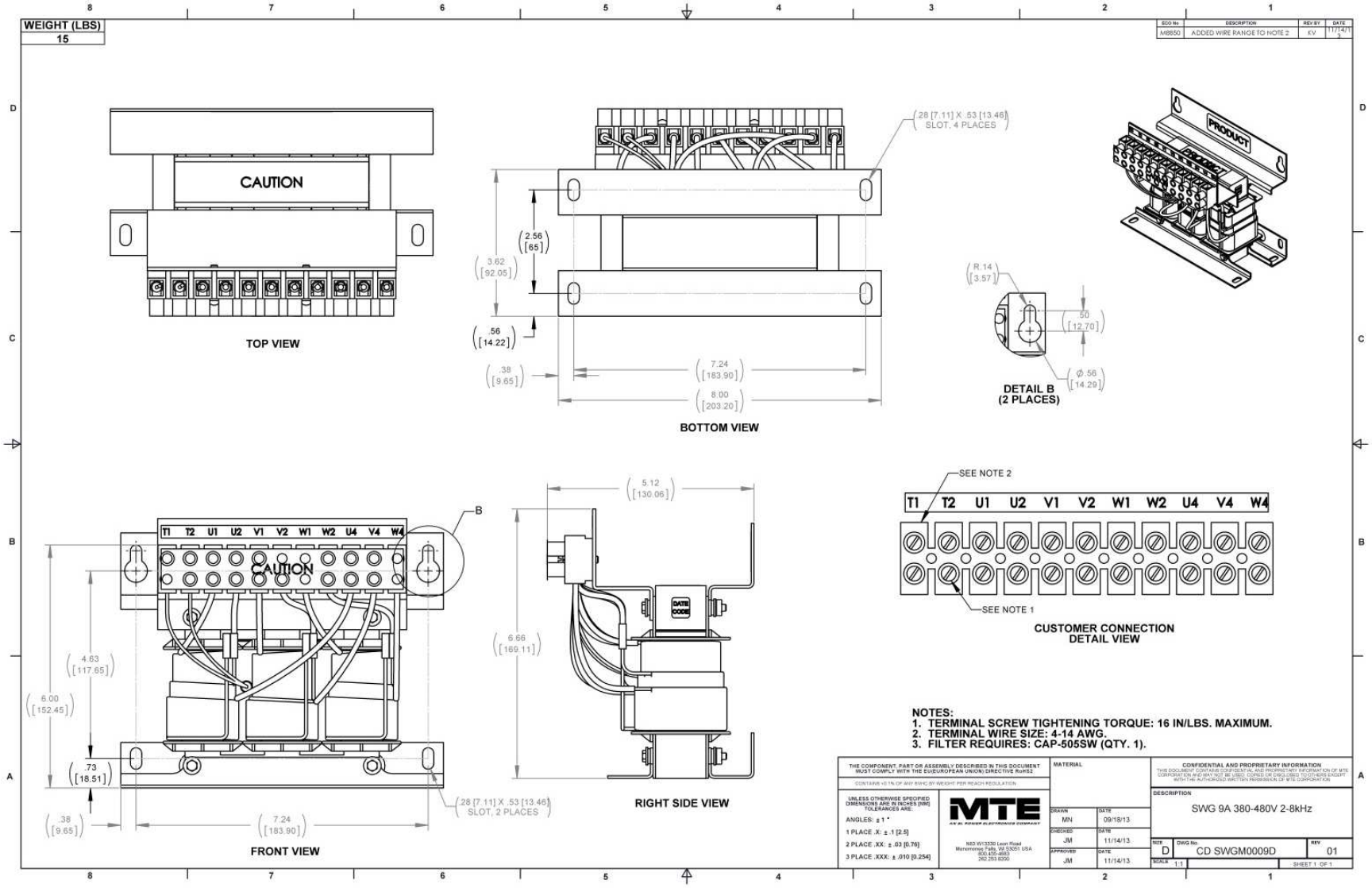

Figure A- 5: SWGM0009D

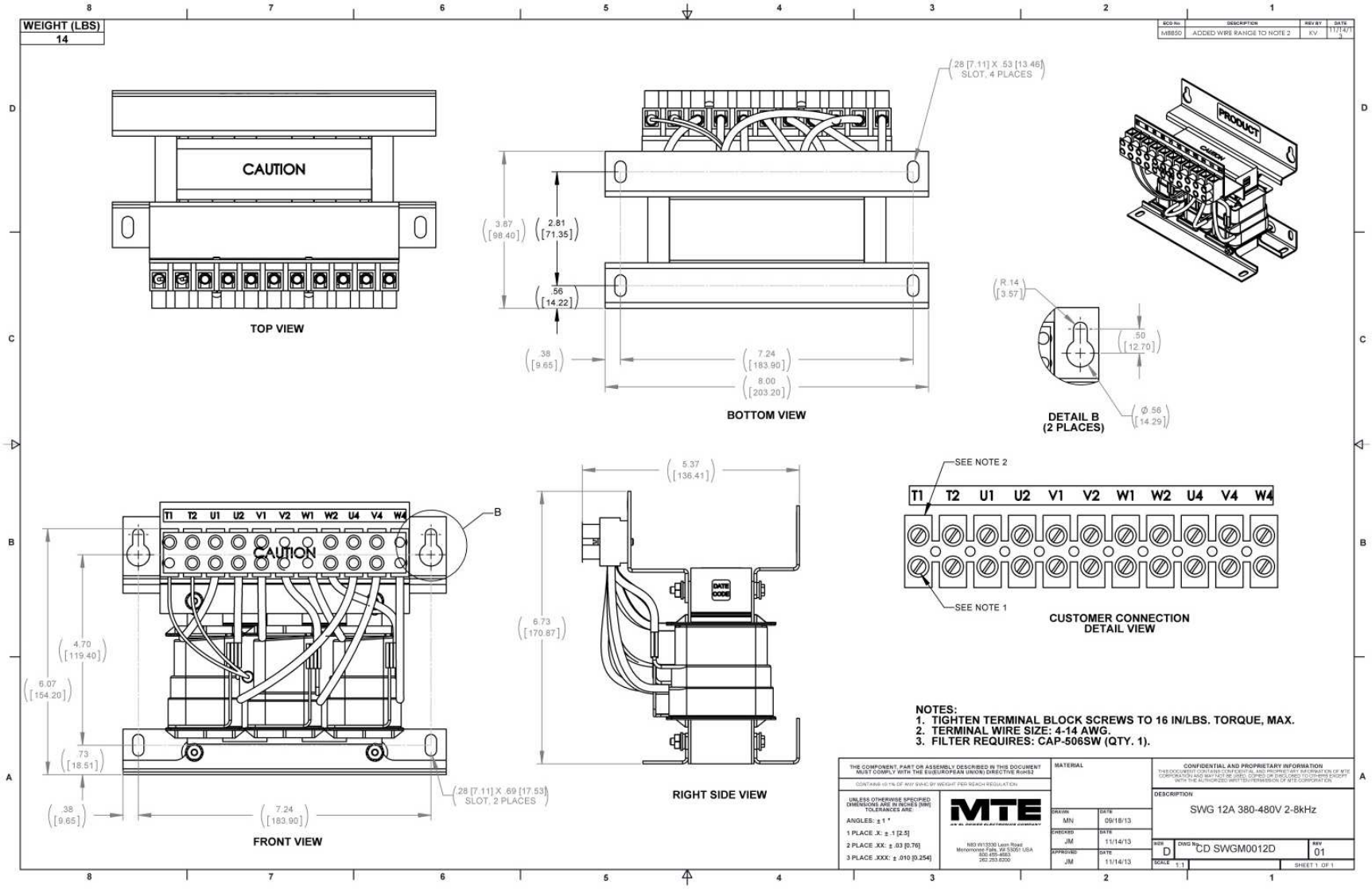

Figure A- 6: SWGM0012D

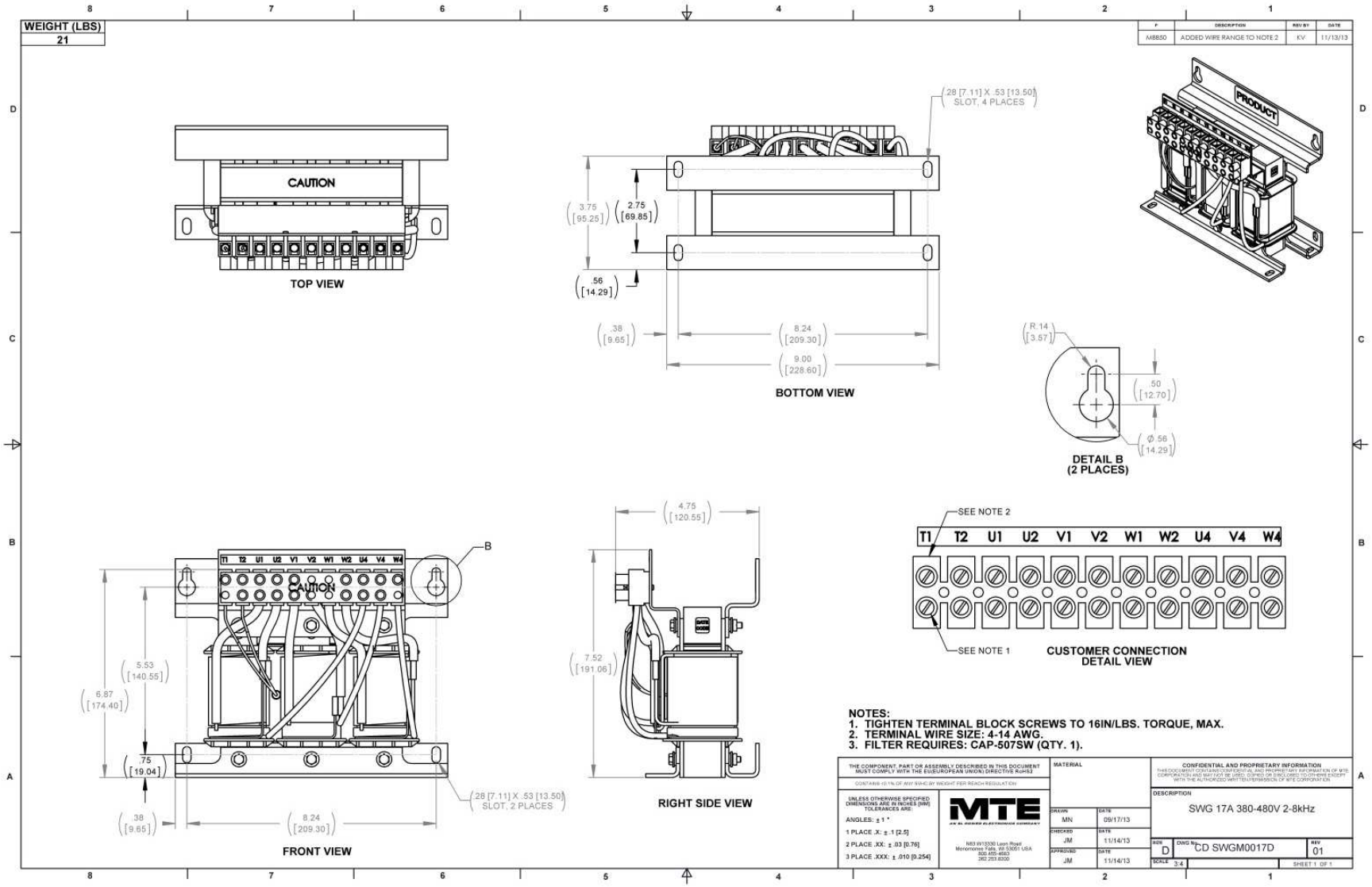

Figure A- 7: SWGM0017D

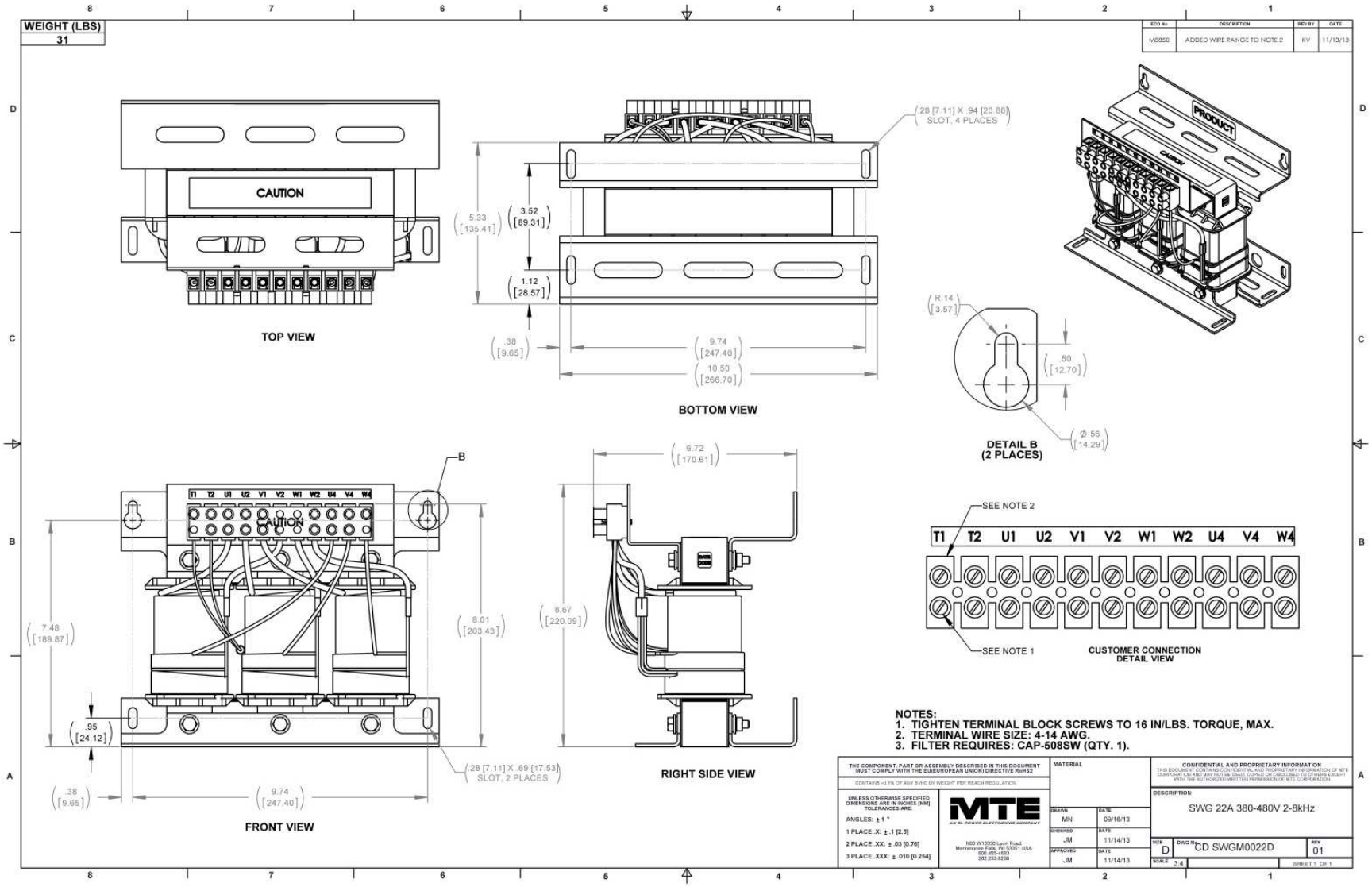

Figure A- 8: SWGM0022D

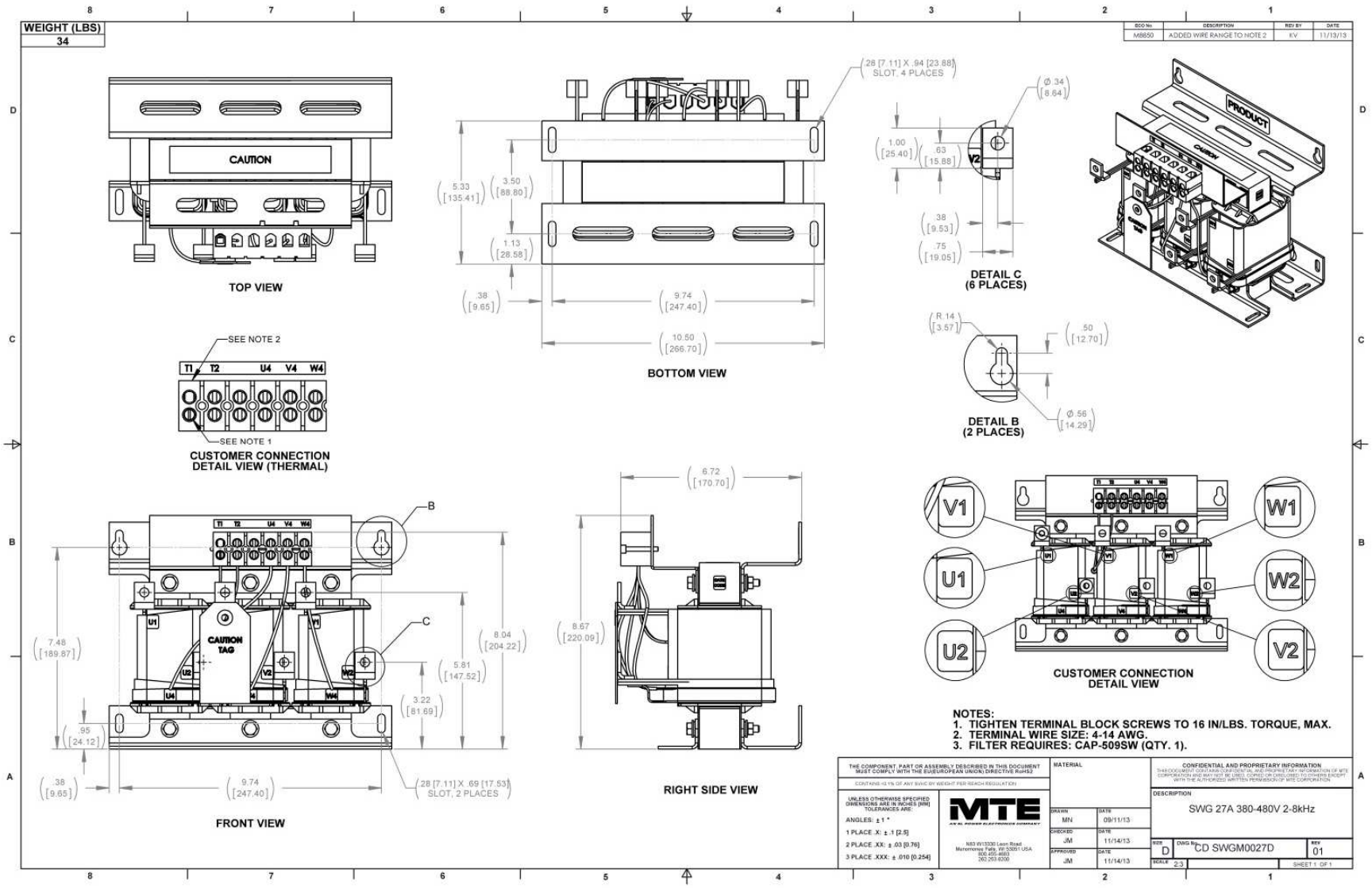

Figure A- 9: SWGM0027D

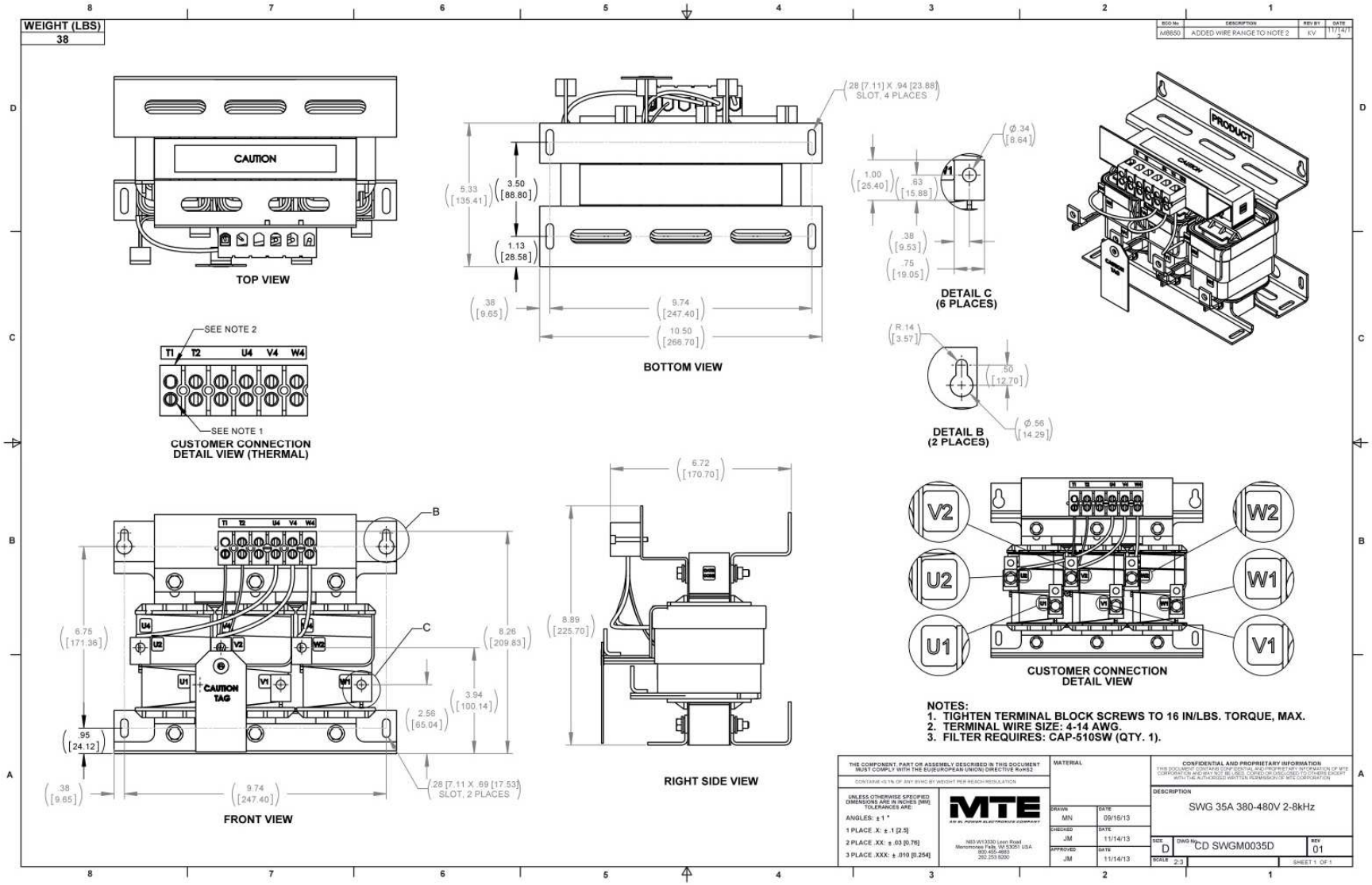

Figure A- 10: SWGM0035D

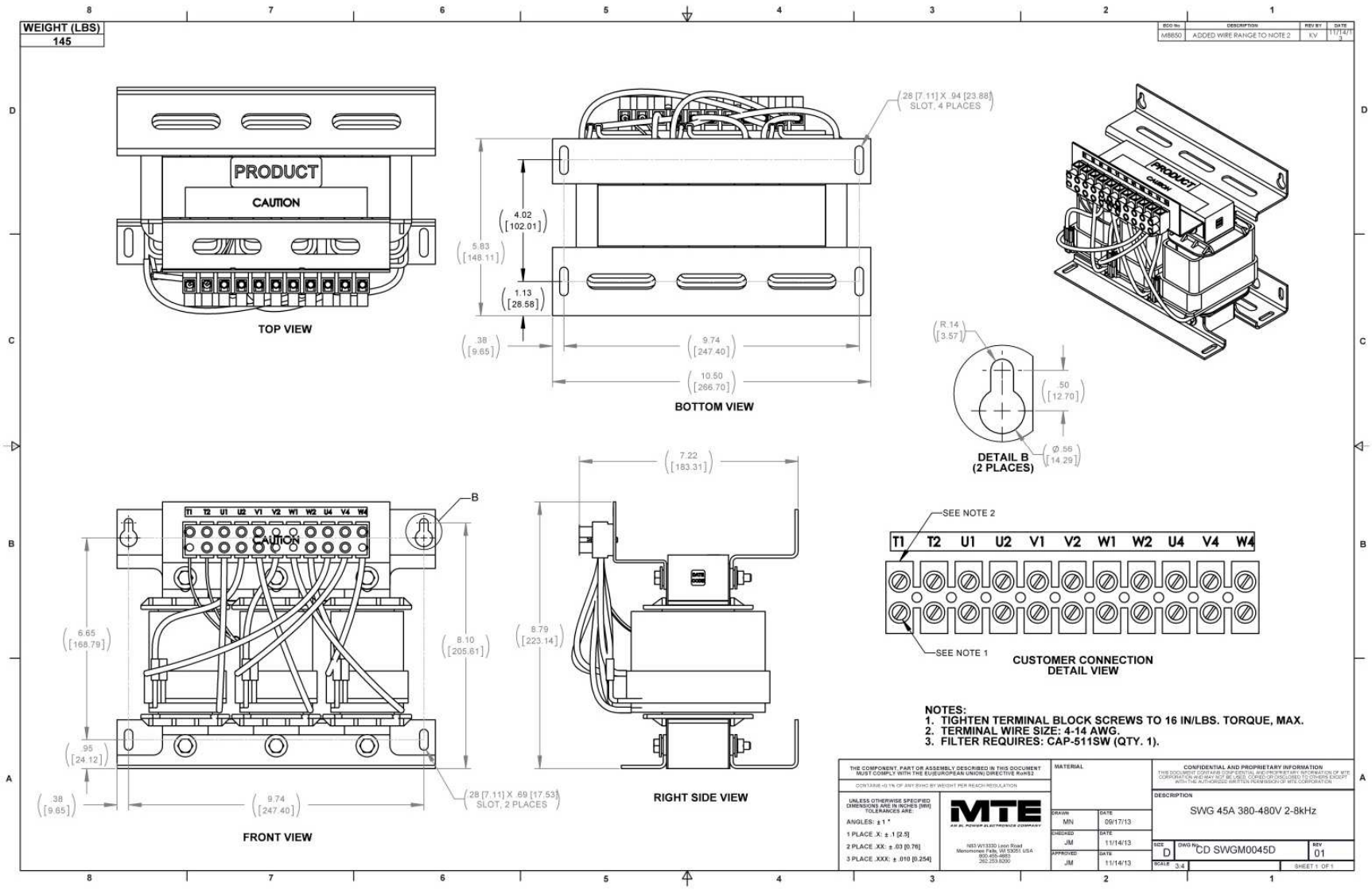

Figure A- 11: SWGM0045D

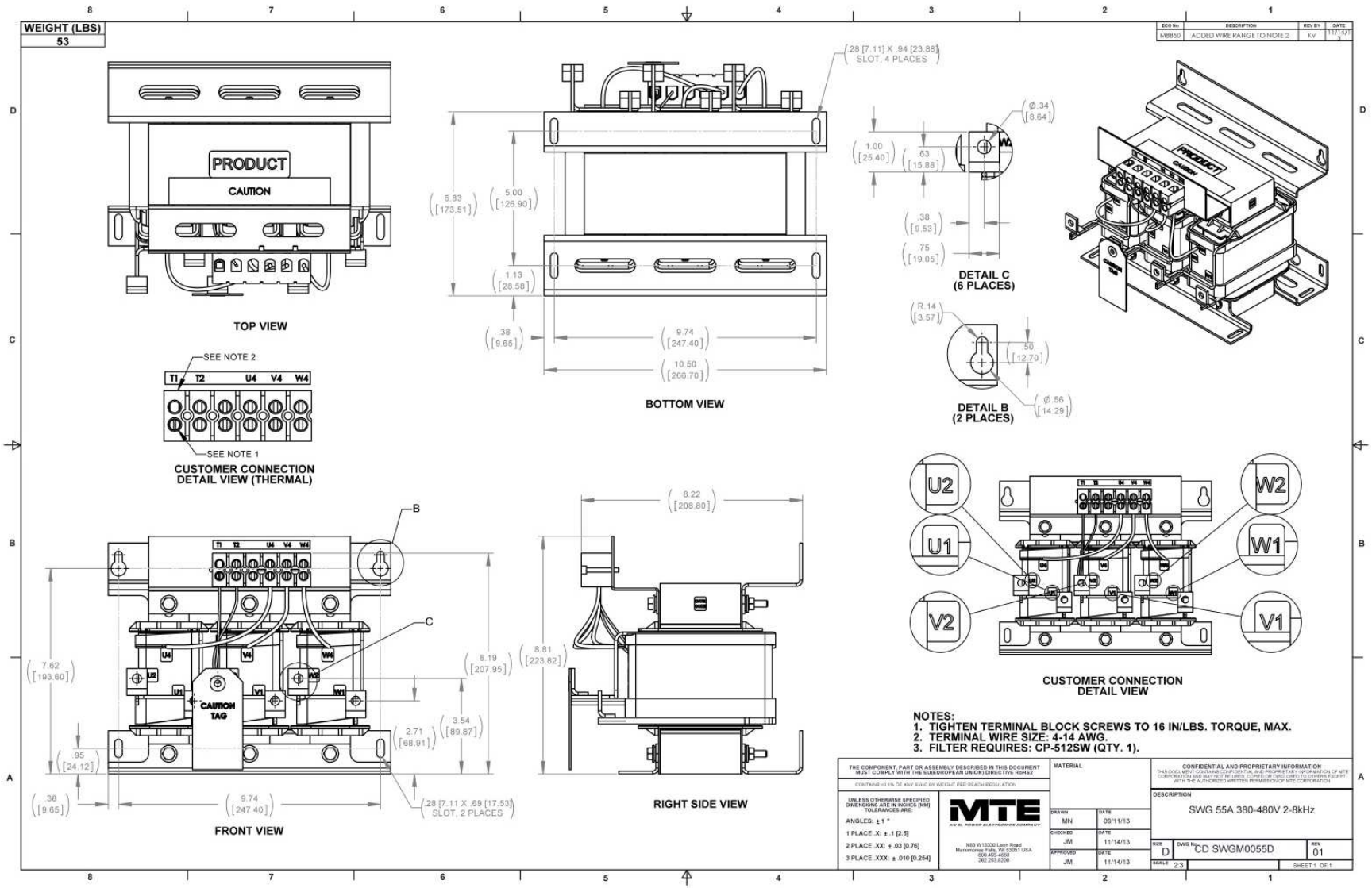

Figure A- 12: SWGM0055D

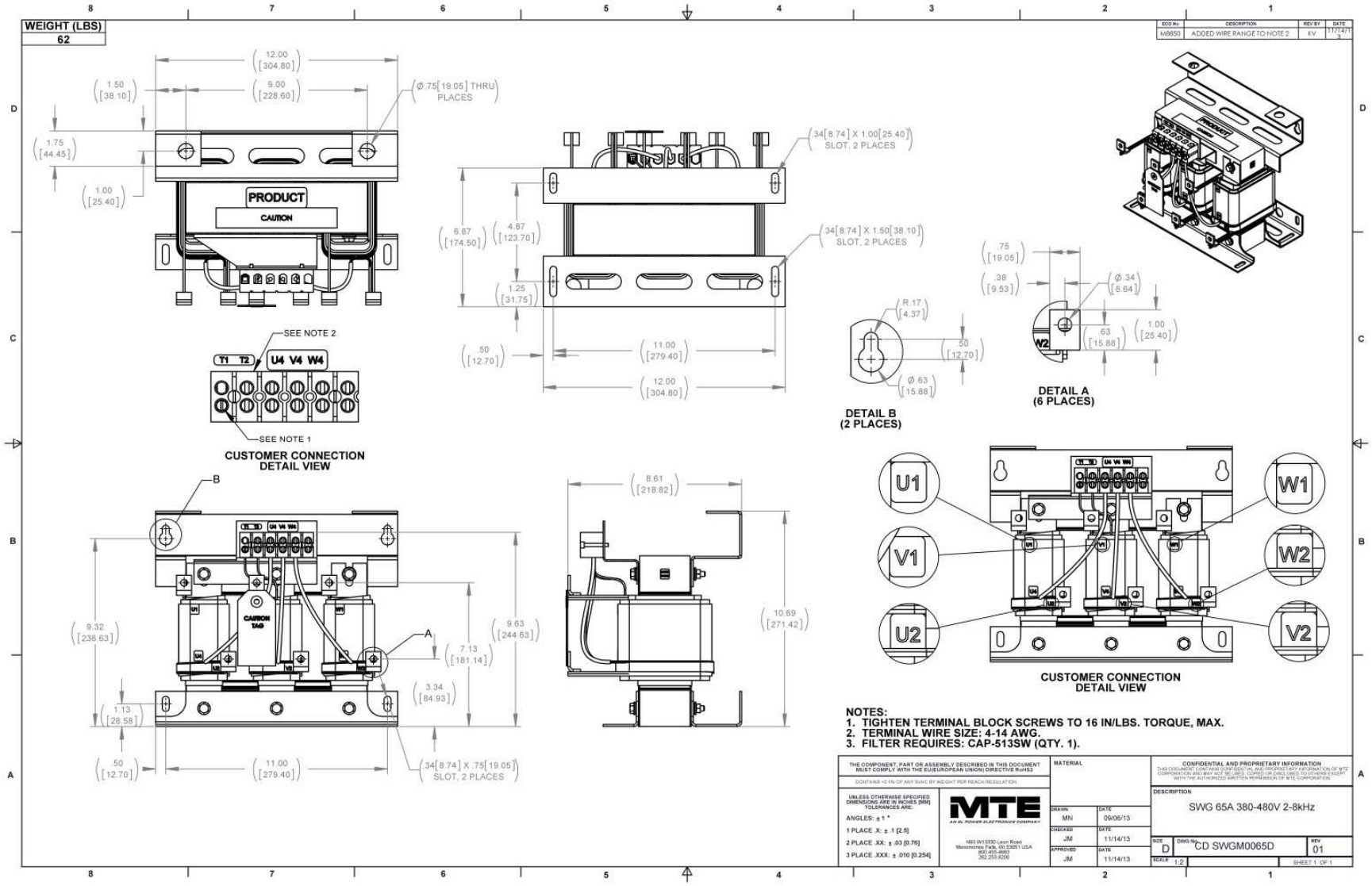

Figure A- 13: SWGM0065D

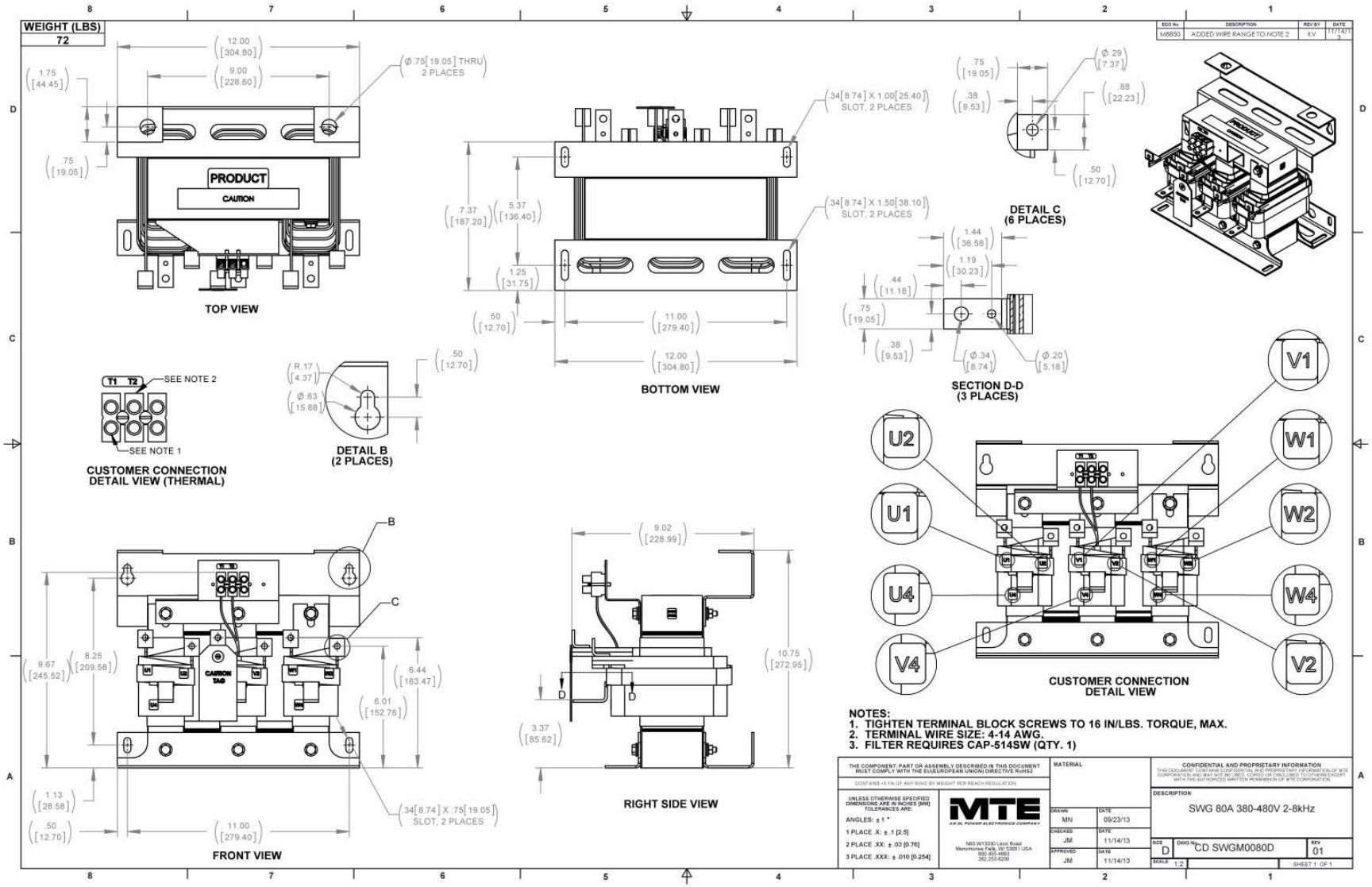

Figure A- 14: SWGM0080D

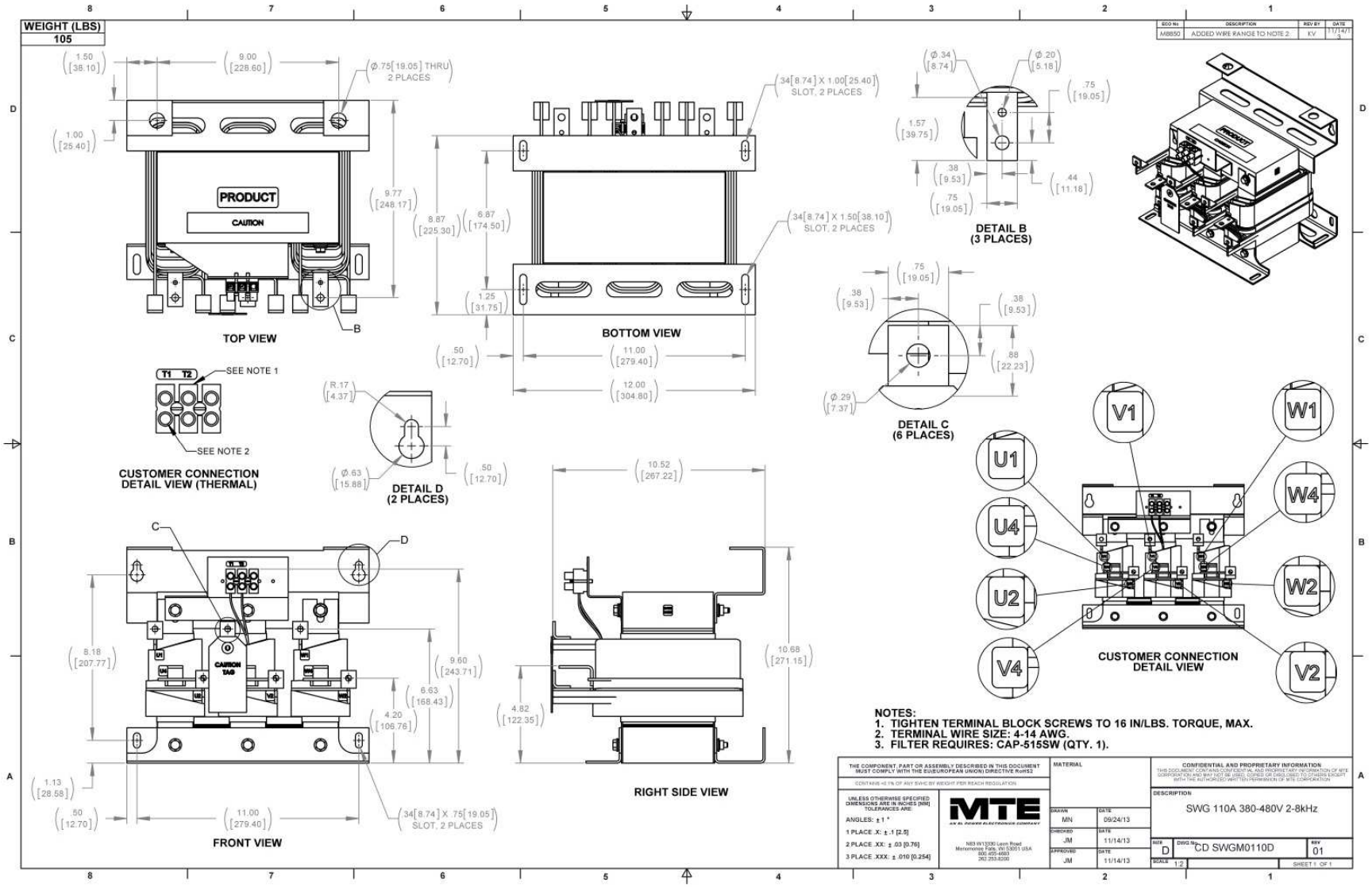

Figure A- 15: SWGM0110D

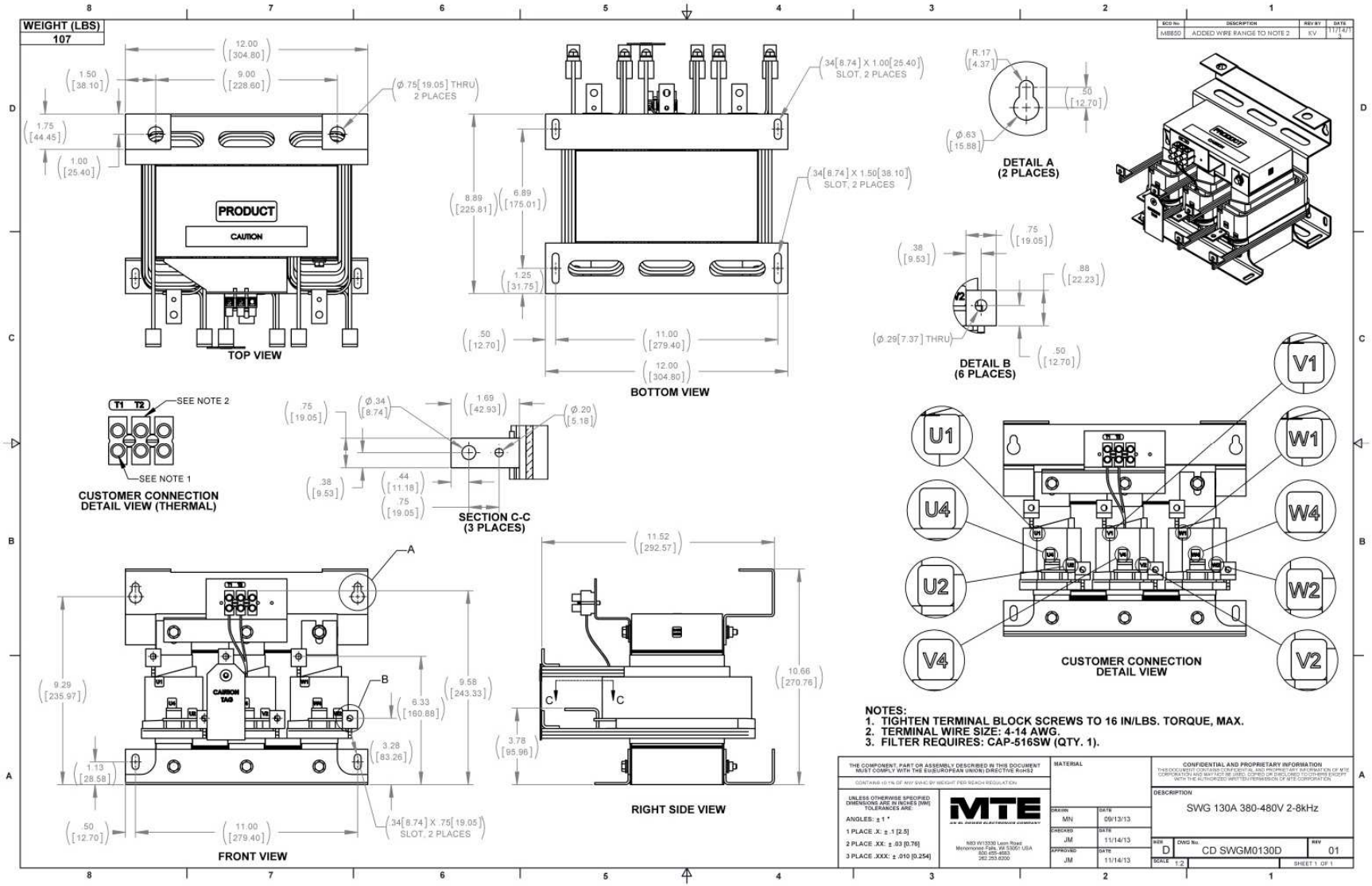

Figure A- 16: SWGM0130D

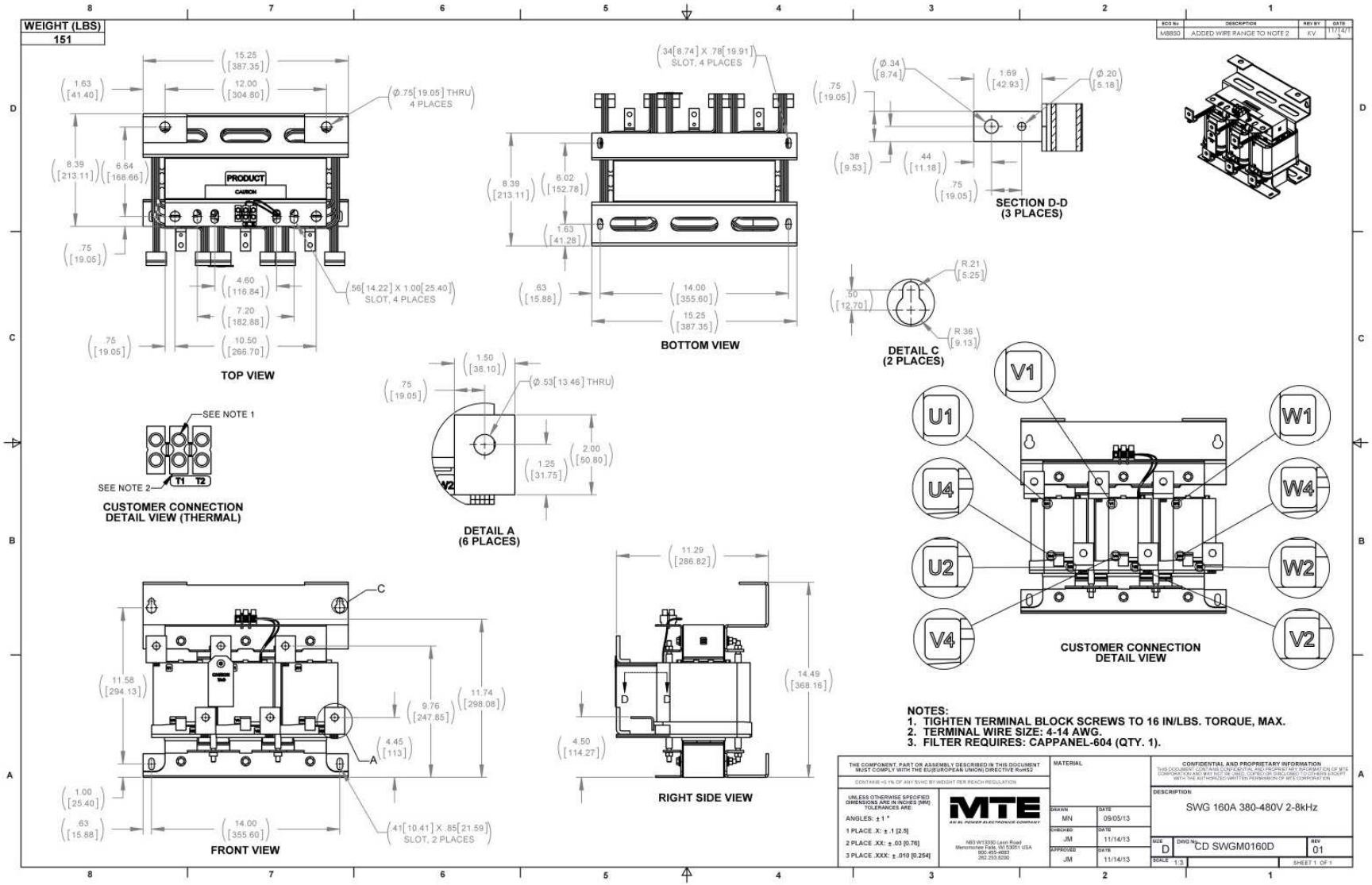

Figure A- 17: SWGM0160D

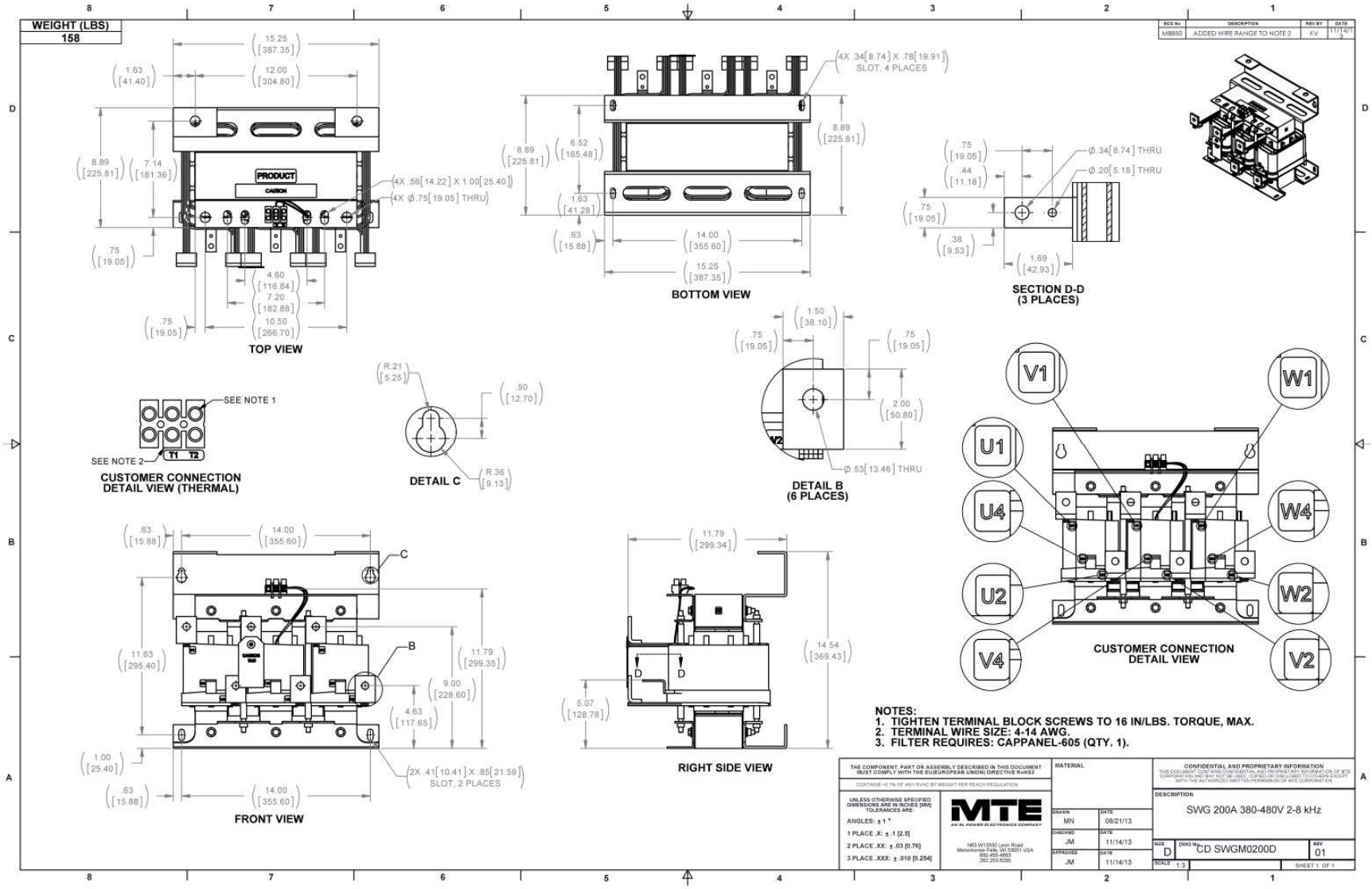

Figure A- 18: SWGM0200D

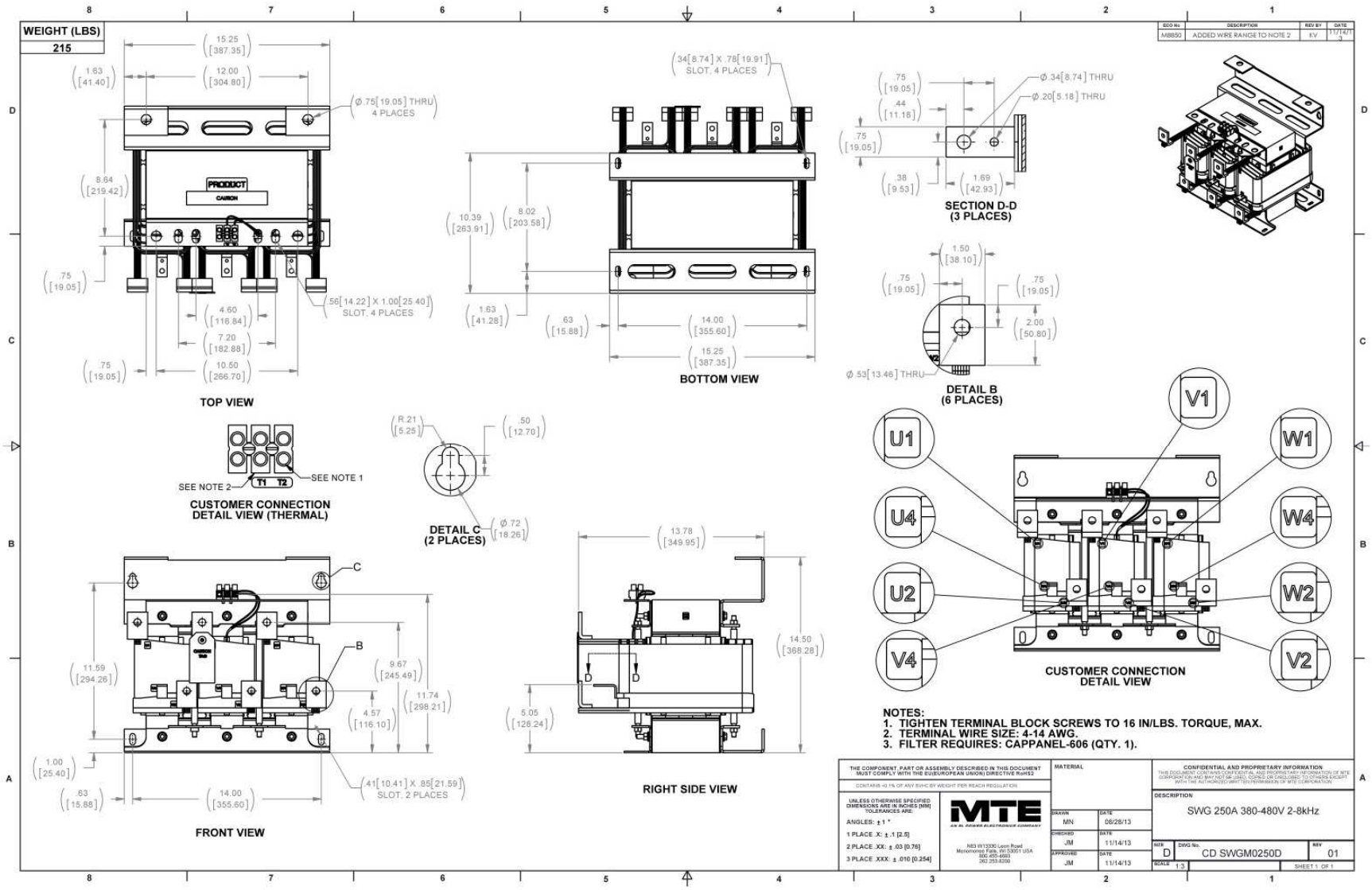

Figure A- 19: SWGM0250D

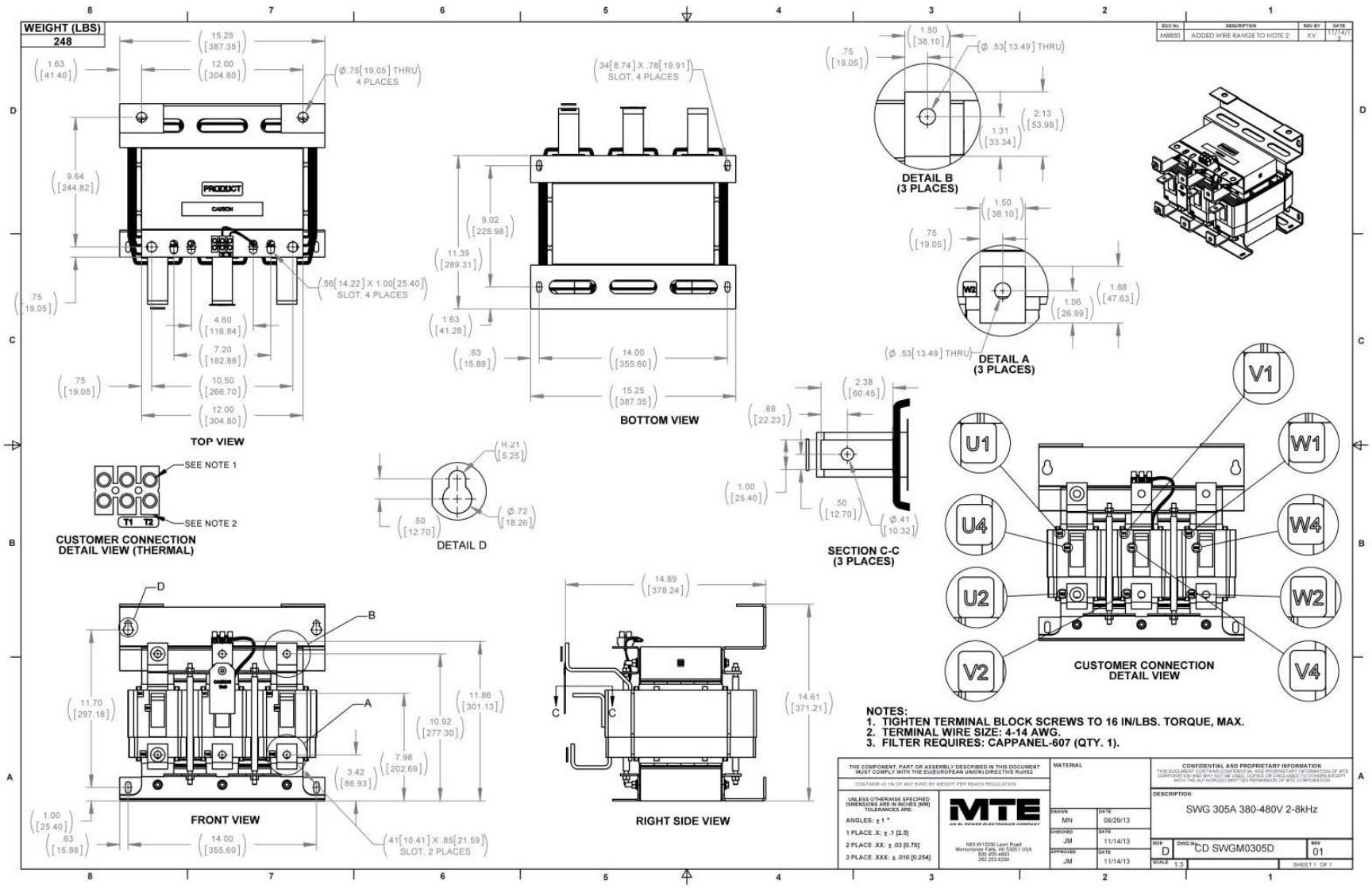

Figure A- 20: SWGM0305D

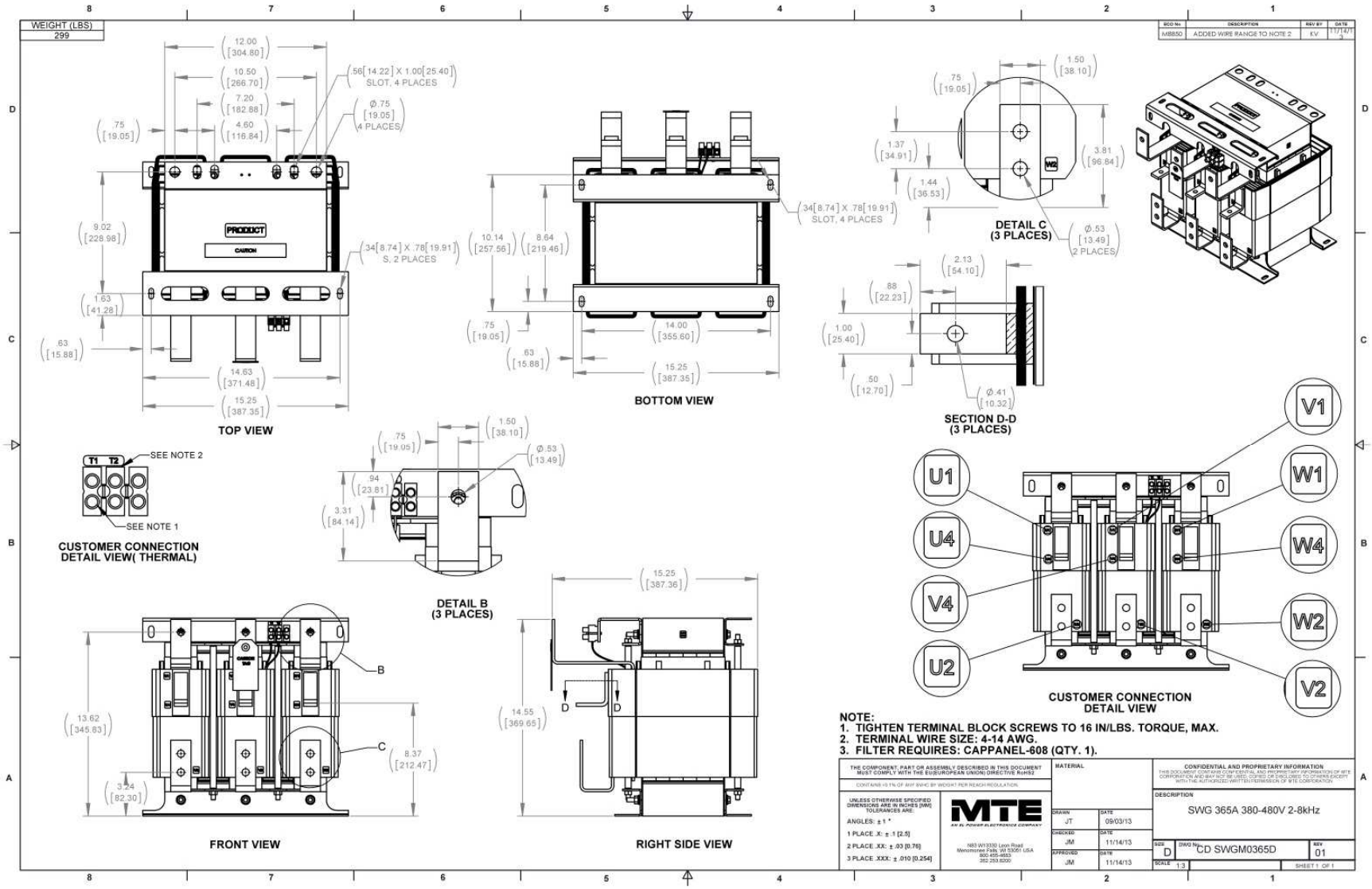

Figure A- 21: SWGM0365D

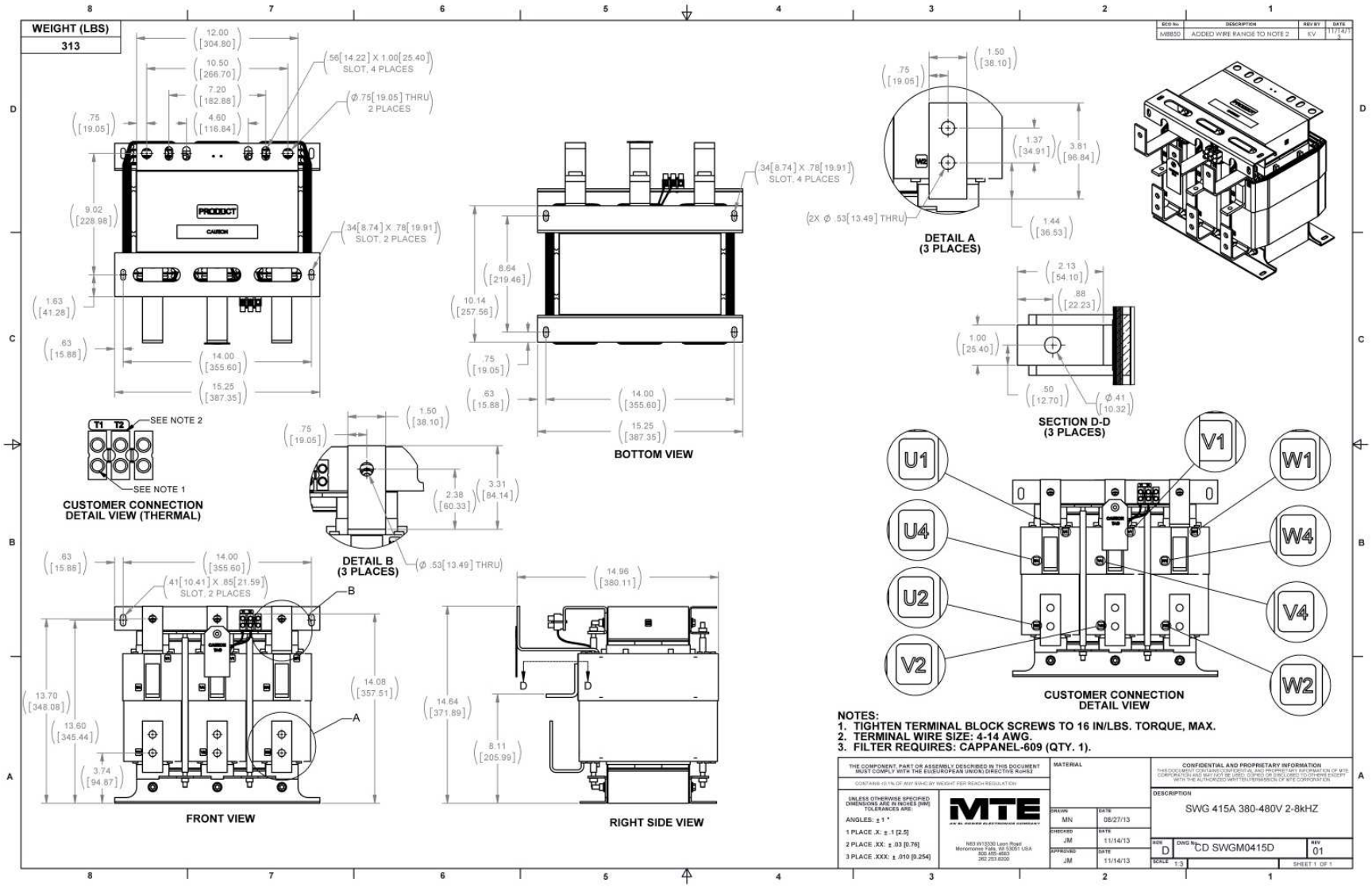

Figure A- 22: SWGM0415D

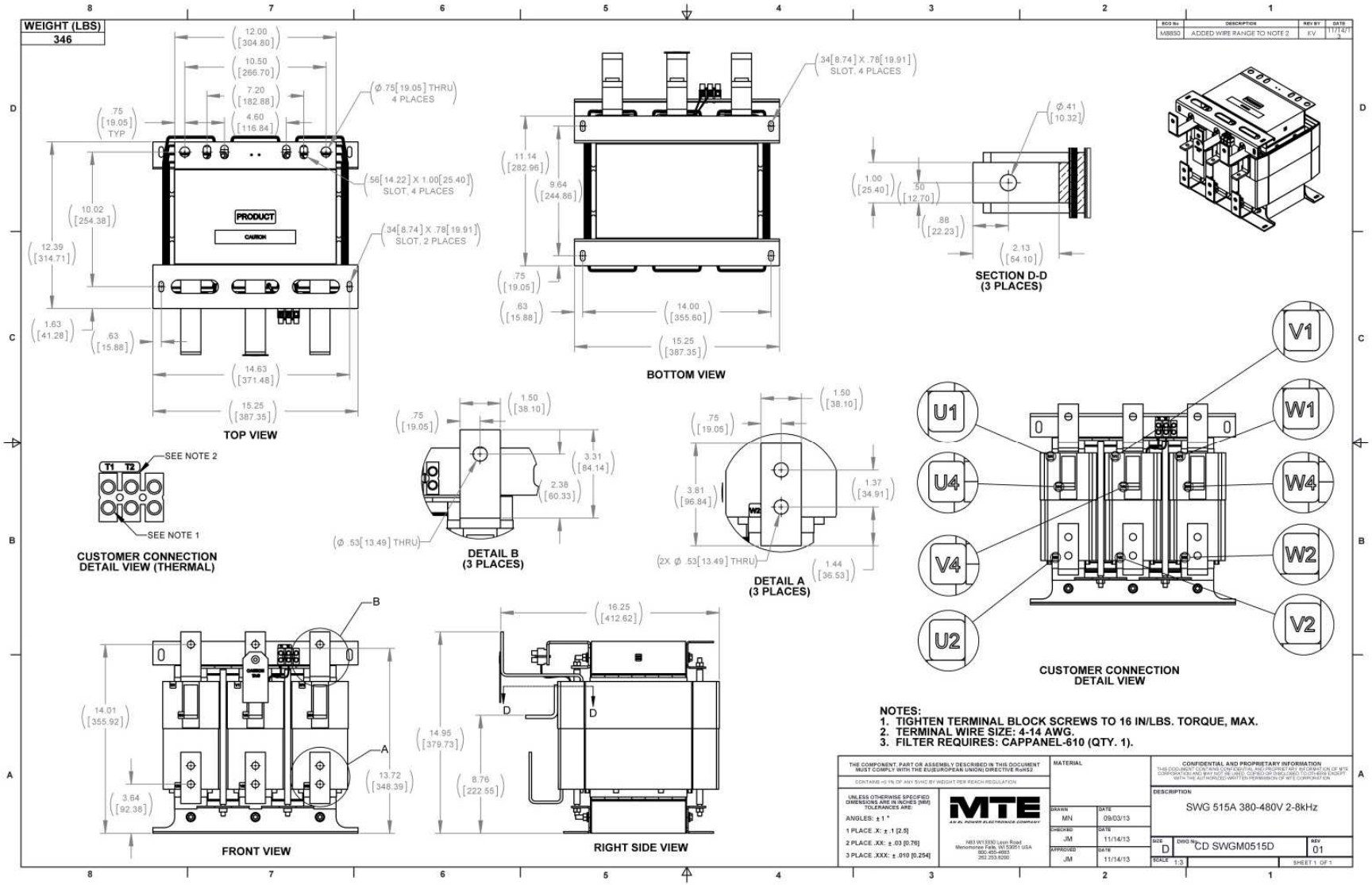

Figure A- 23: SWGM0515D

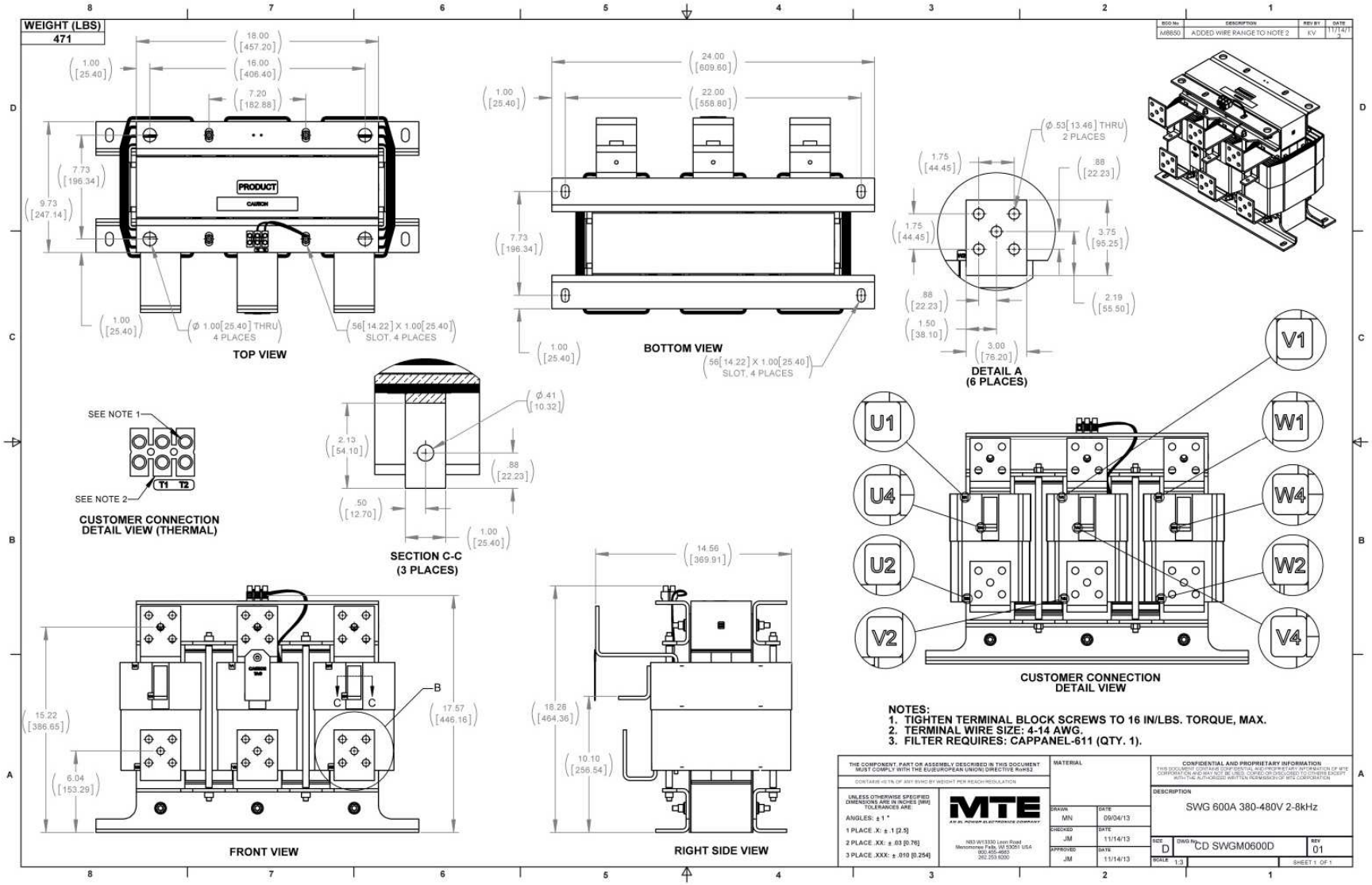

Figure A- 24: SWGM0600D

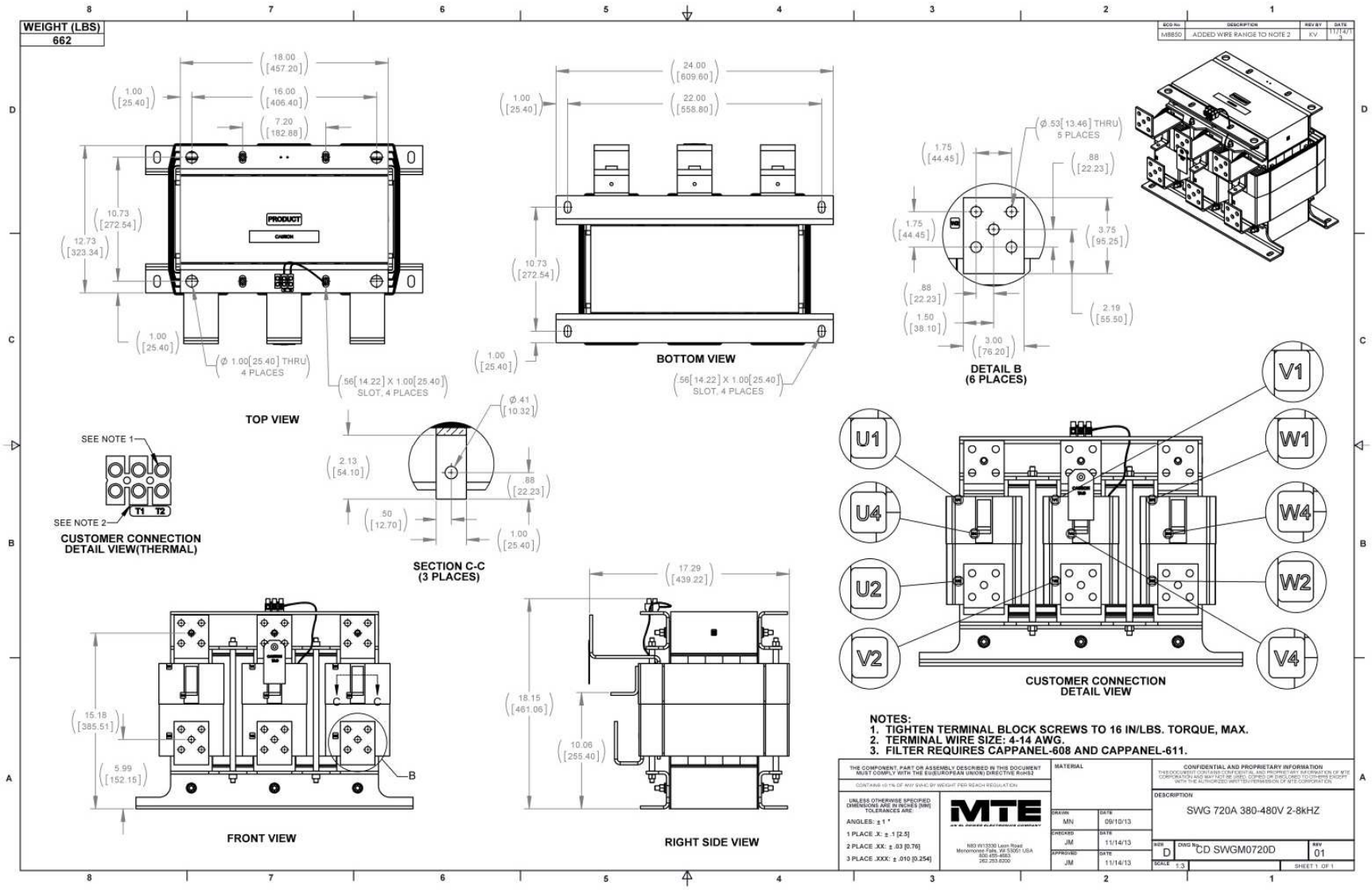

Figure A- 25: SWGM0720D

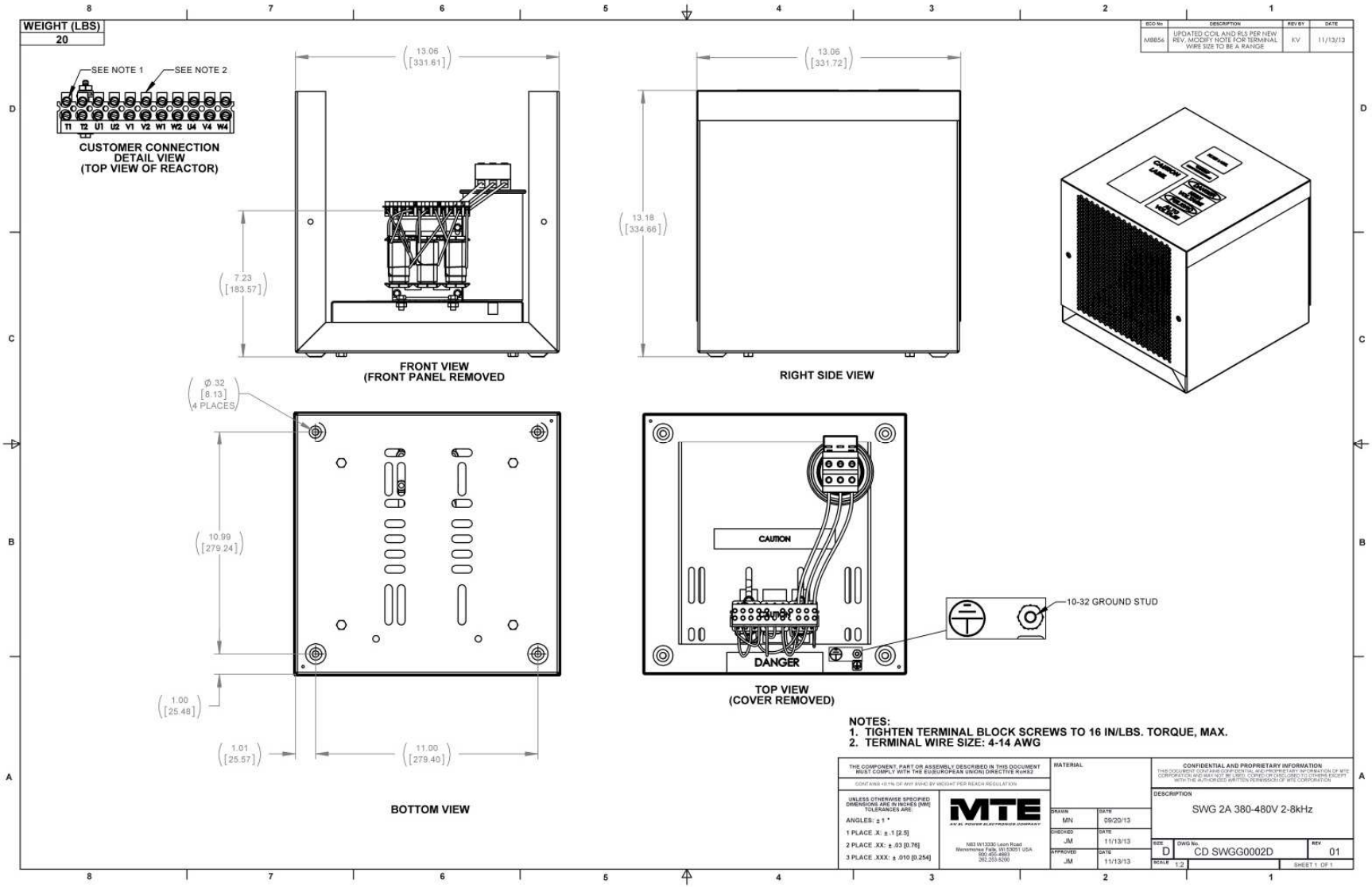

Figure A- 26: SWGG0002D

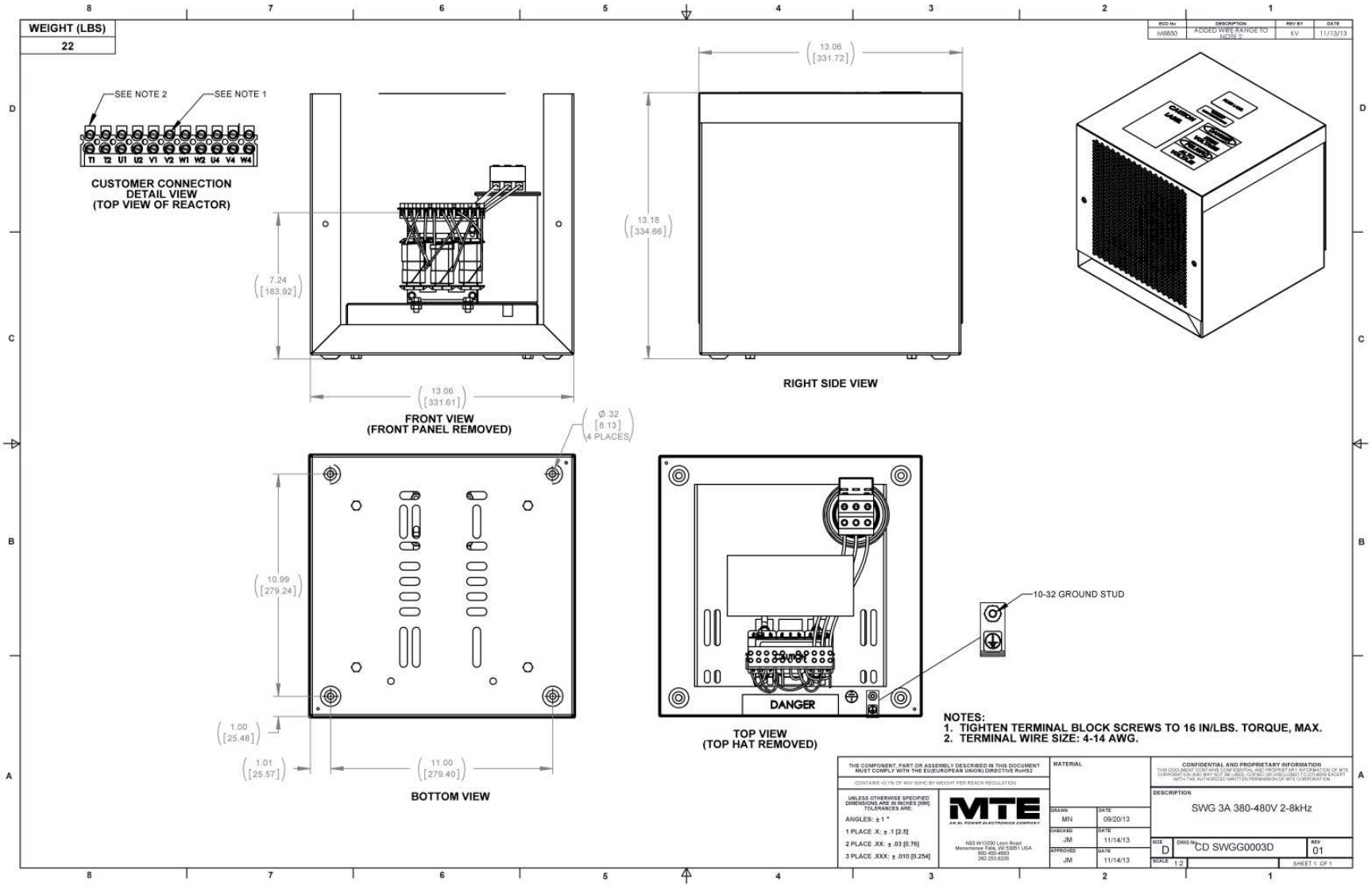

Figure A- 27: SWGG0003D

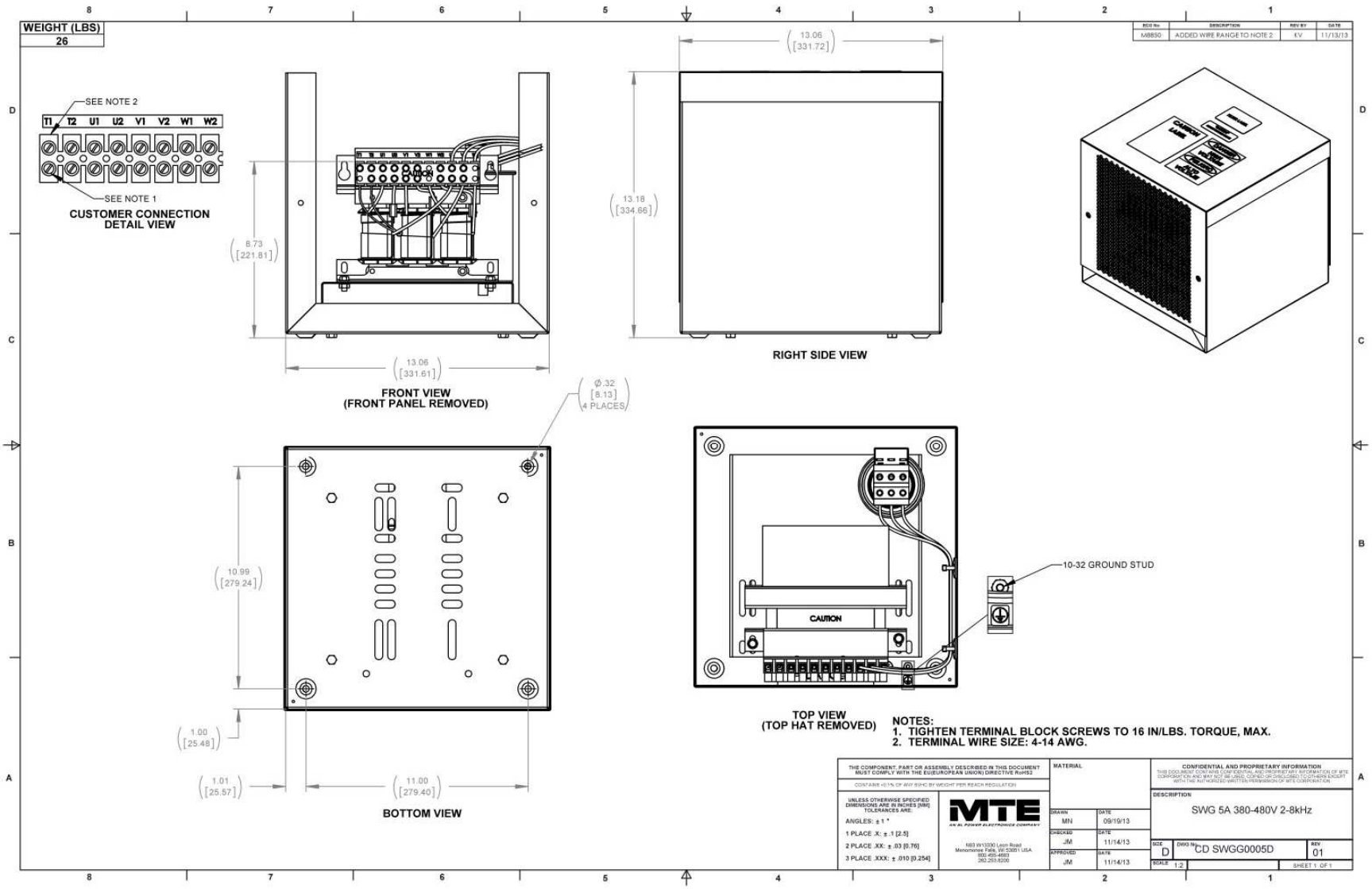

Figure A- 28: SWGG0005D

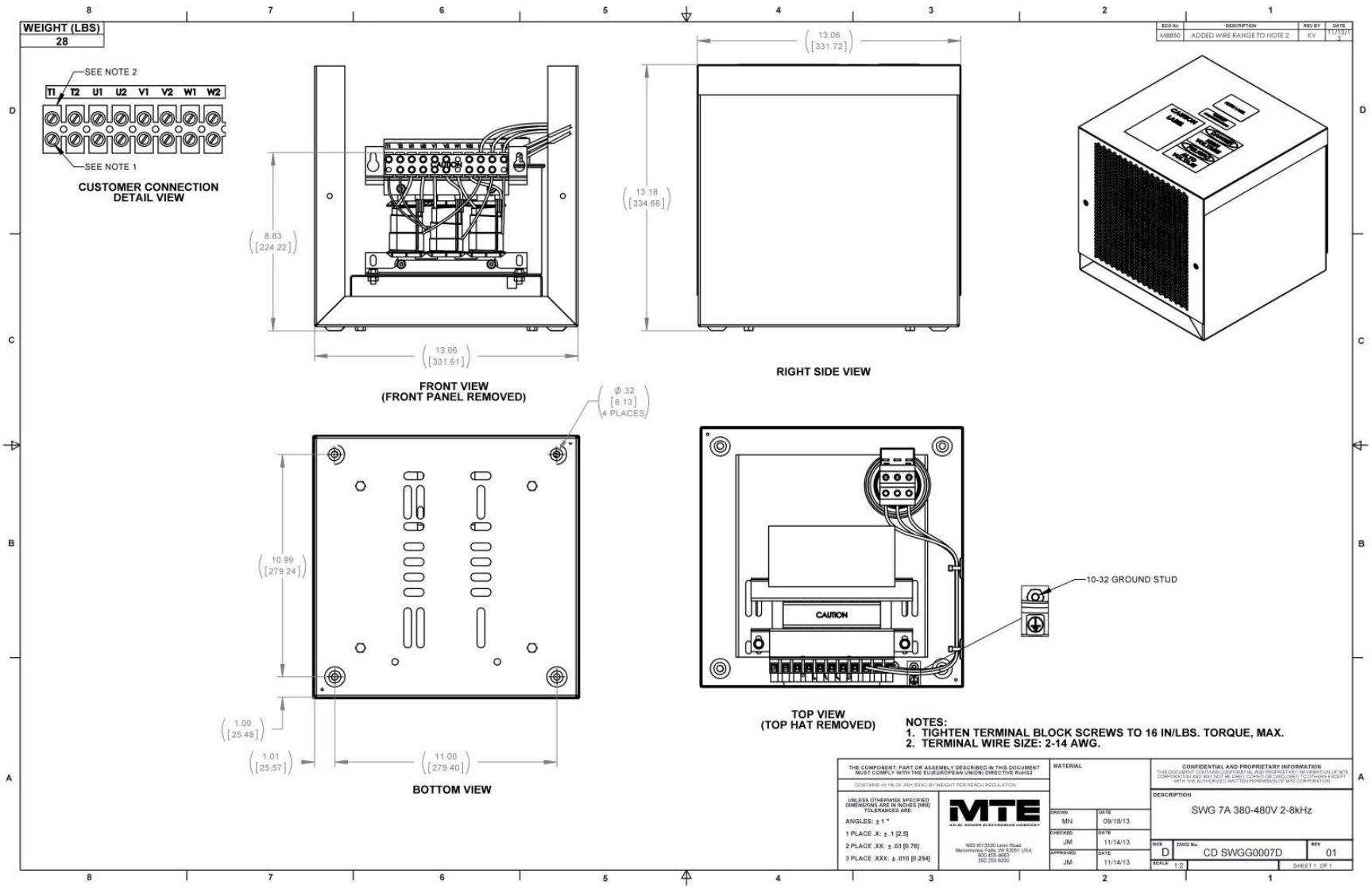

Figure A- 29: SWGG0007D

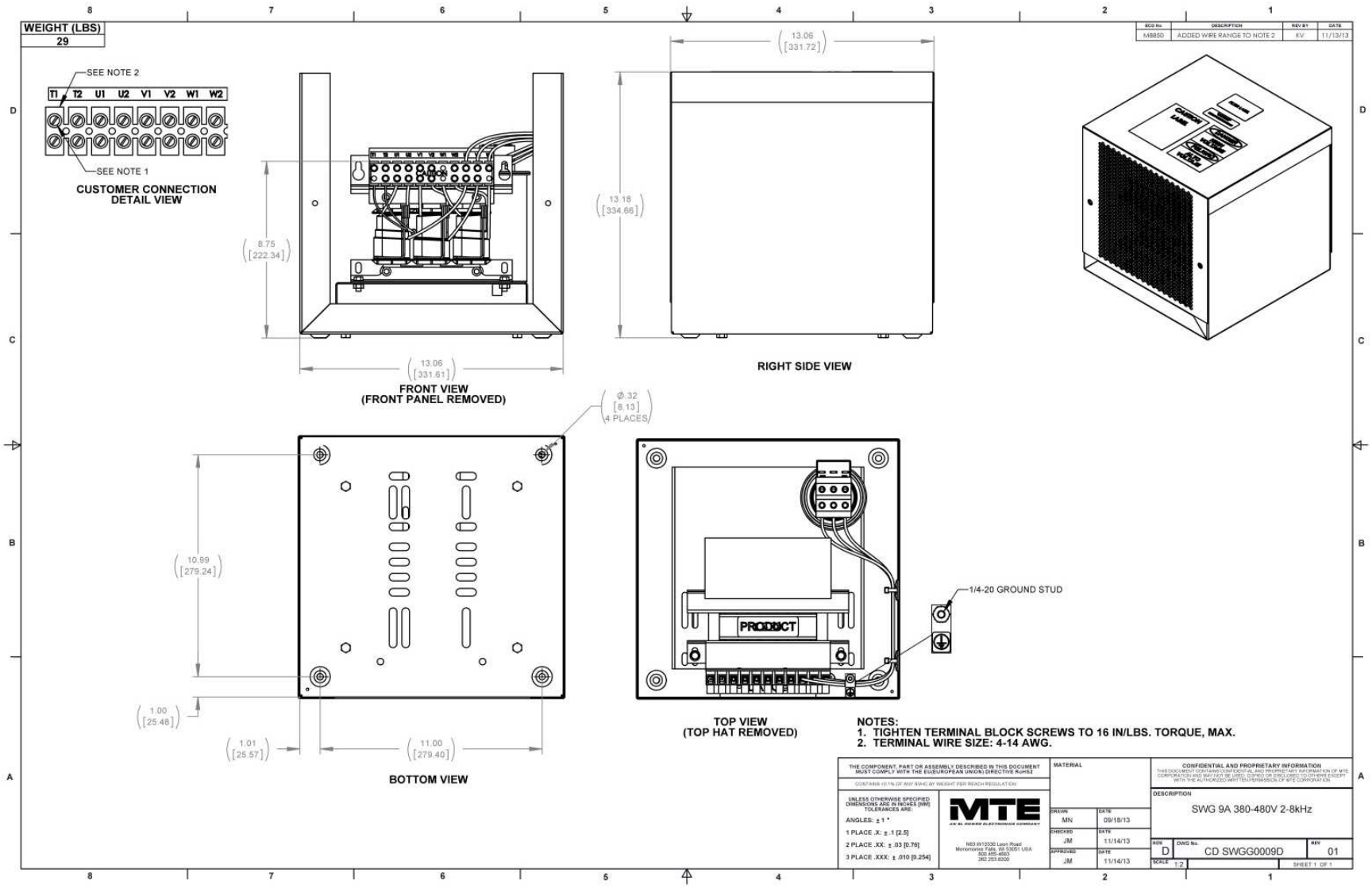

Figure A- 30: SWGG0009D

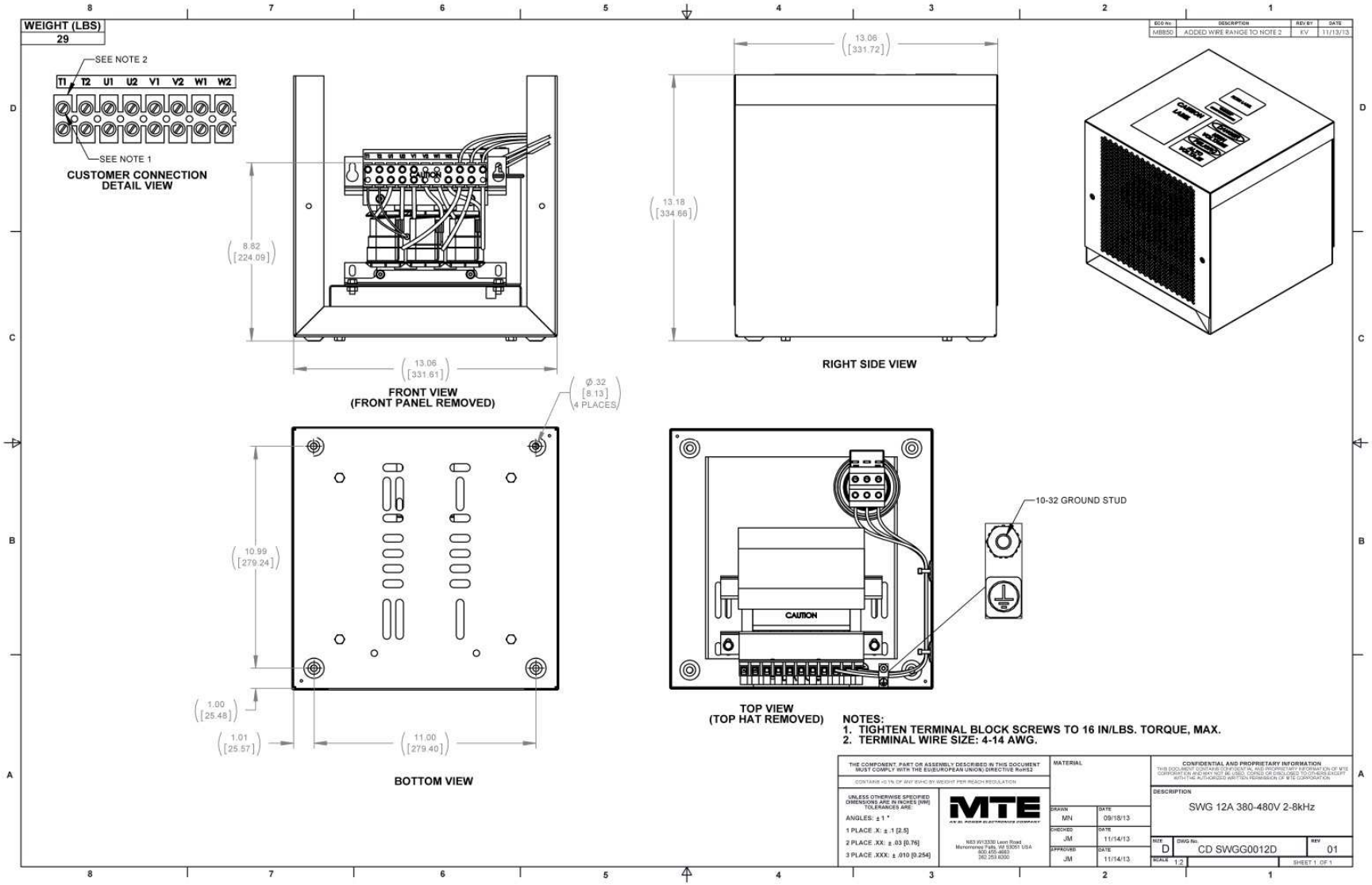

Figure A- 31: SWGG0012D

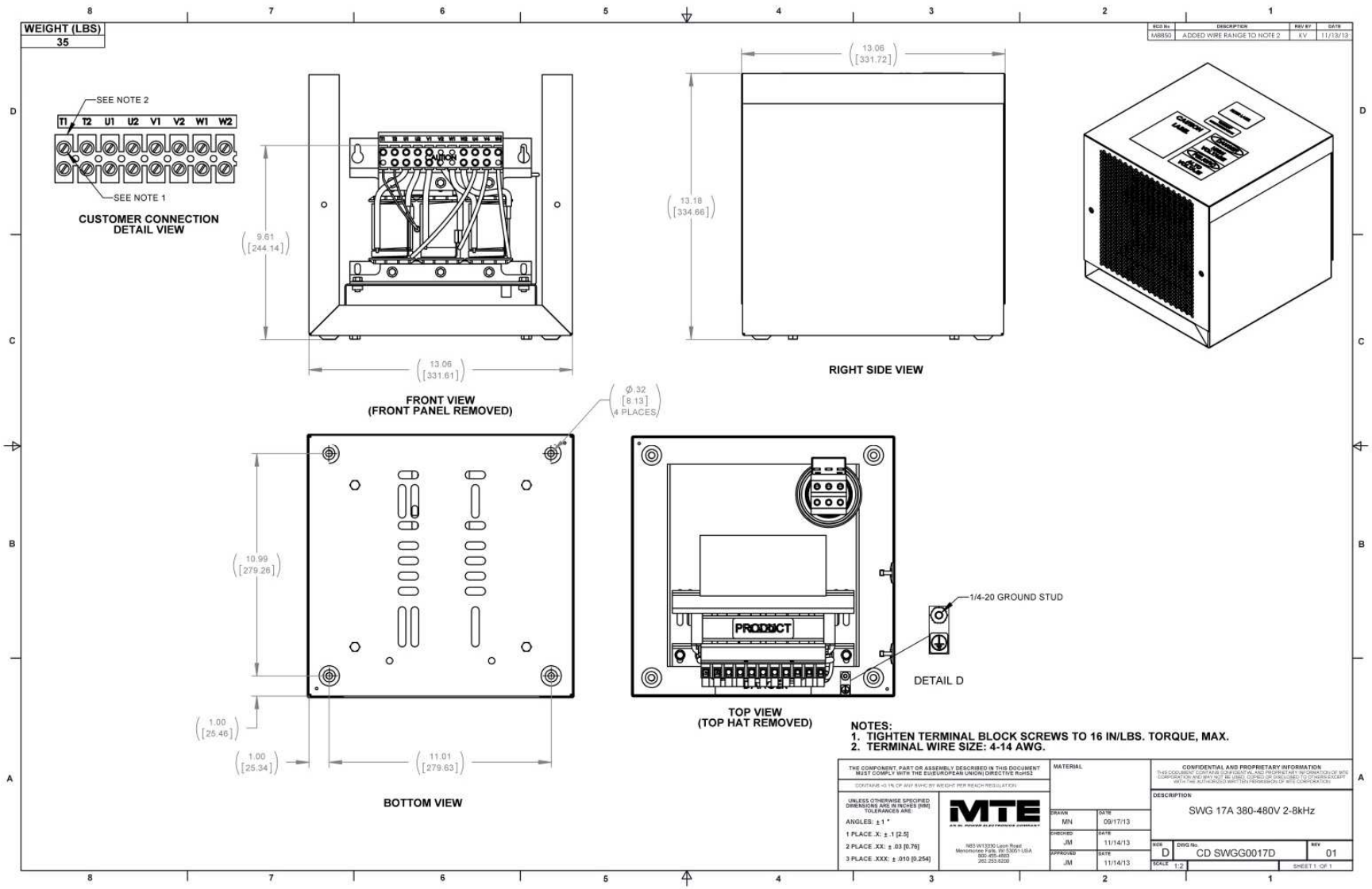

Figure A- 32: SWGG0017D

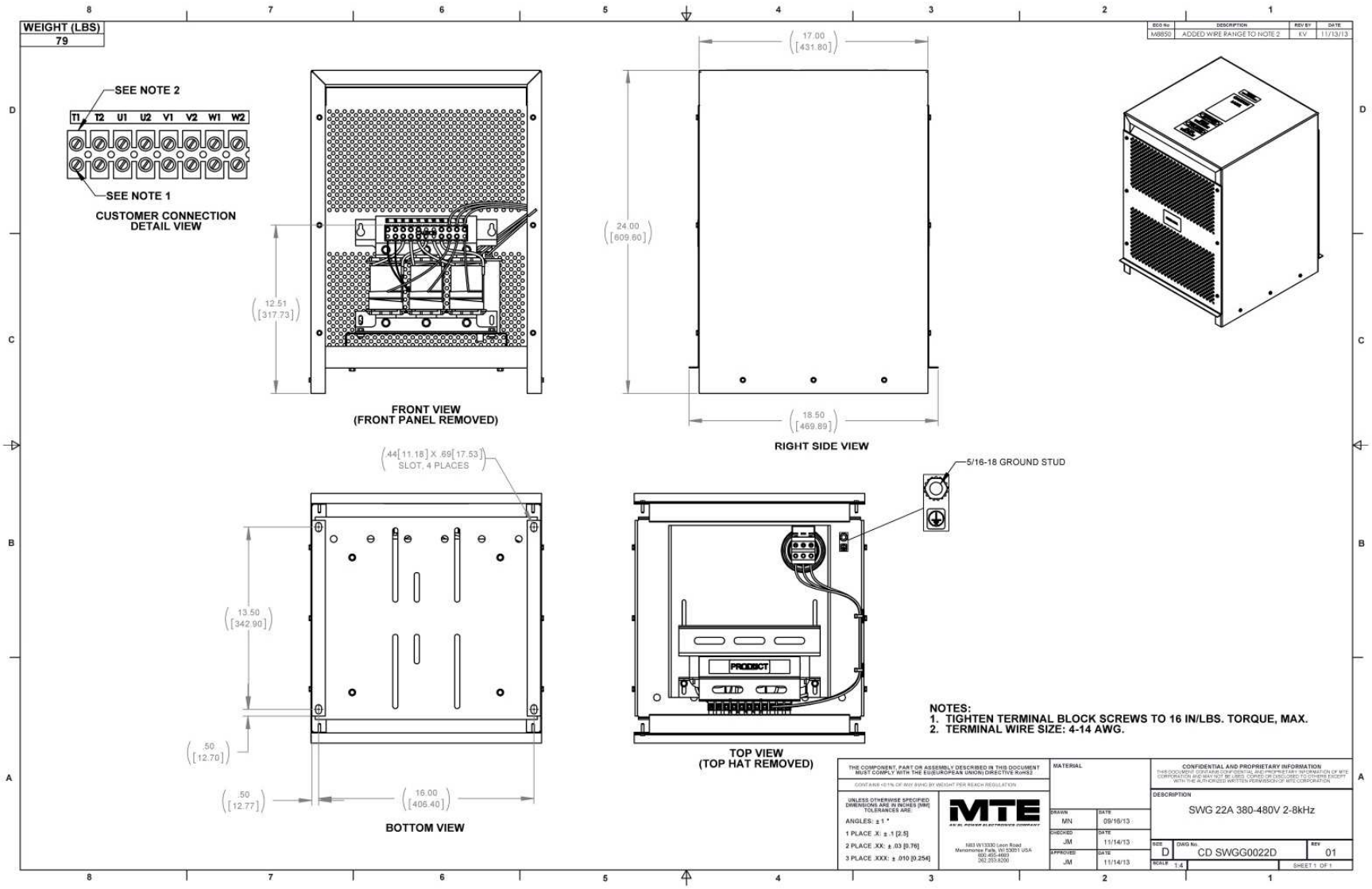

Figure A- 33: SWGG0022D

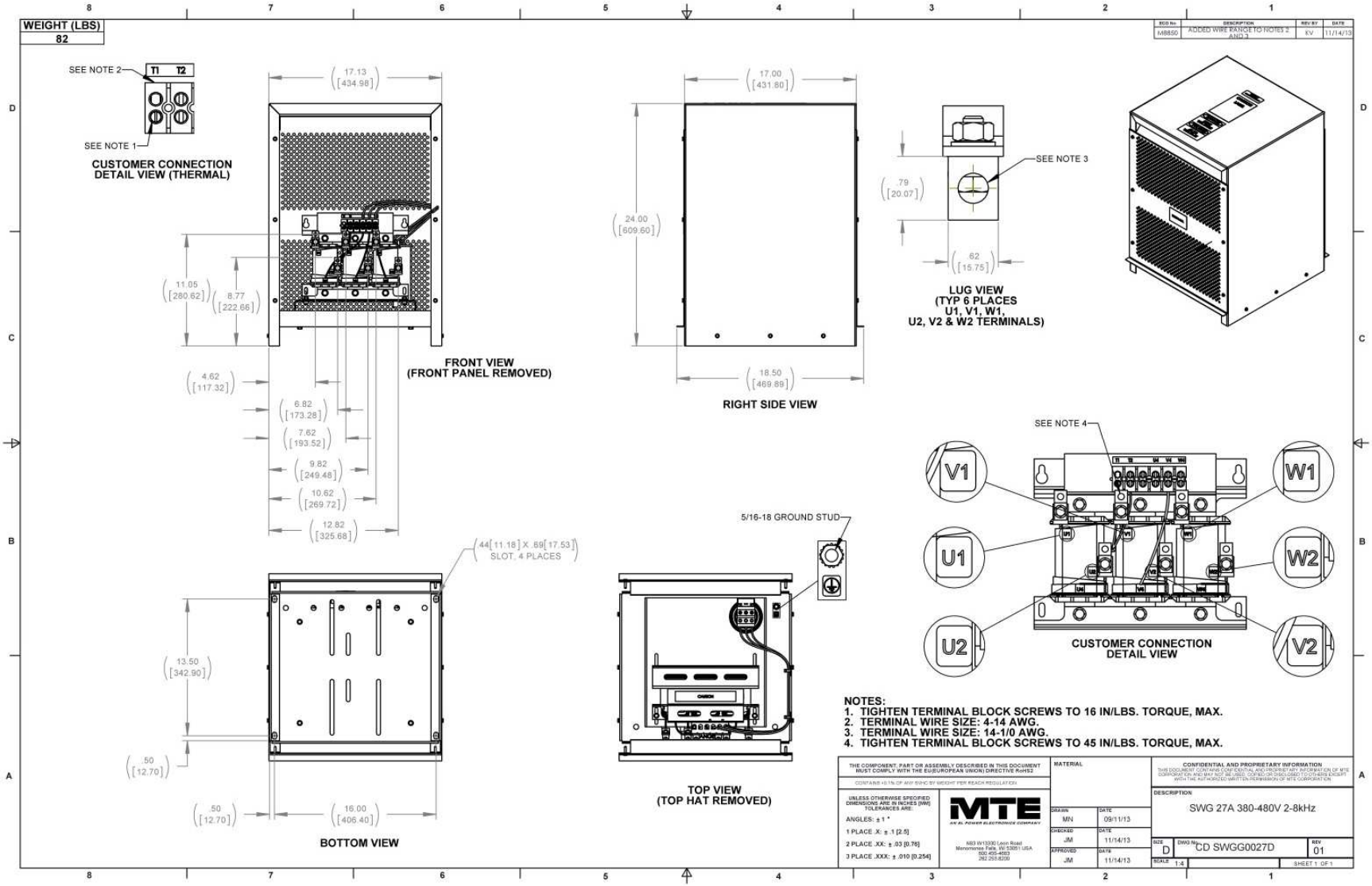

Figure A- 34: SWGG0027D

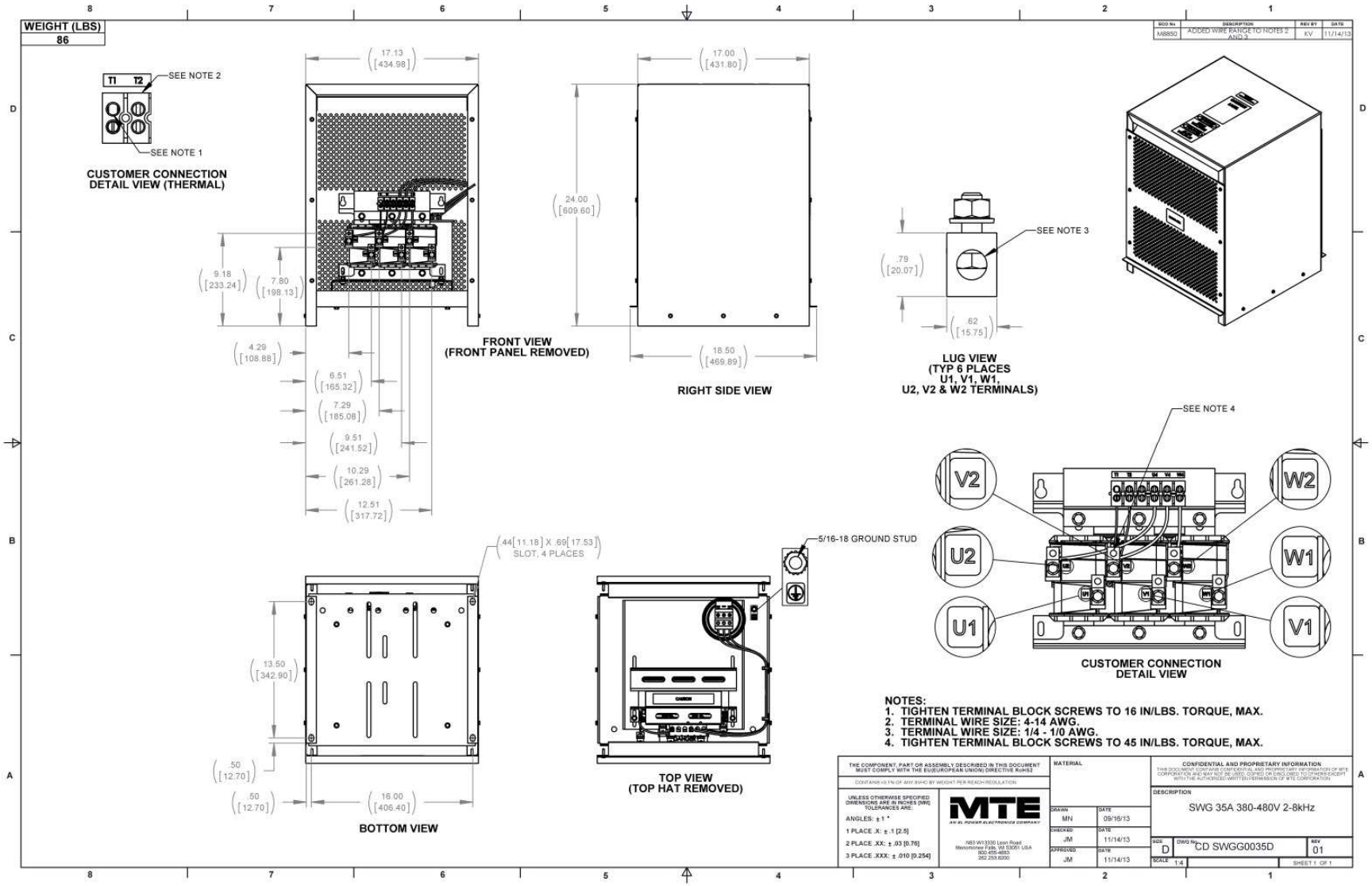

Figure A- 35: SWGG0035D

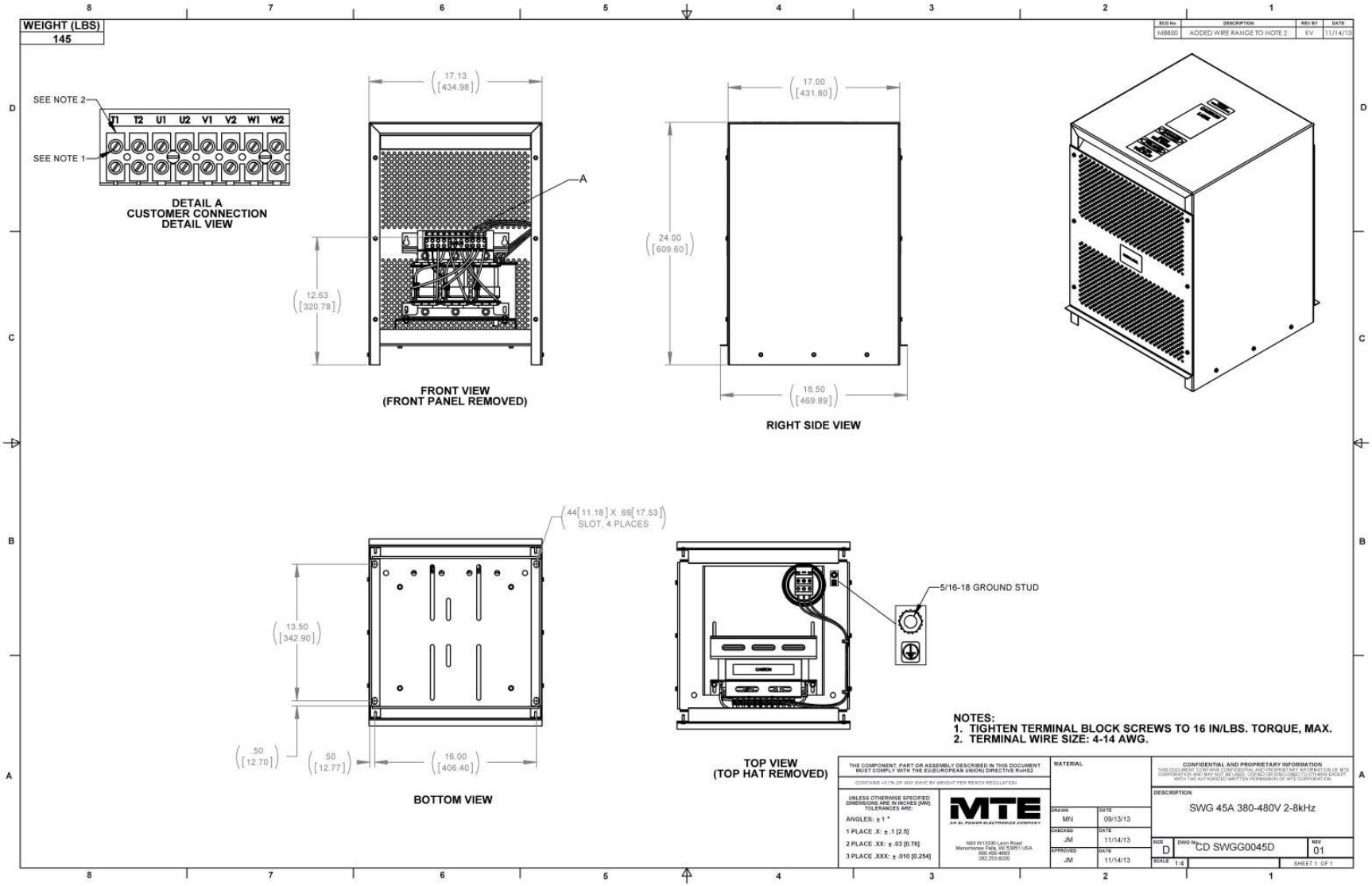

Figure A- 36: SWGG0045D

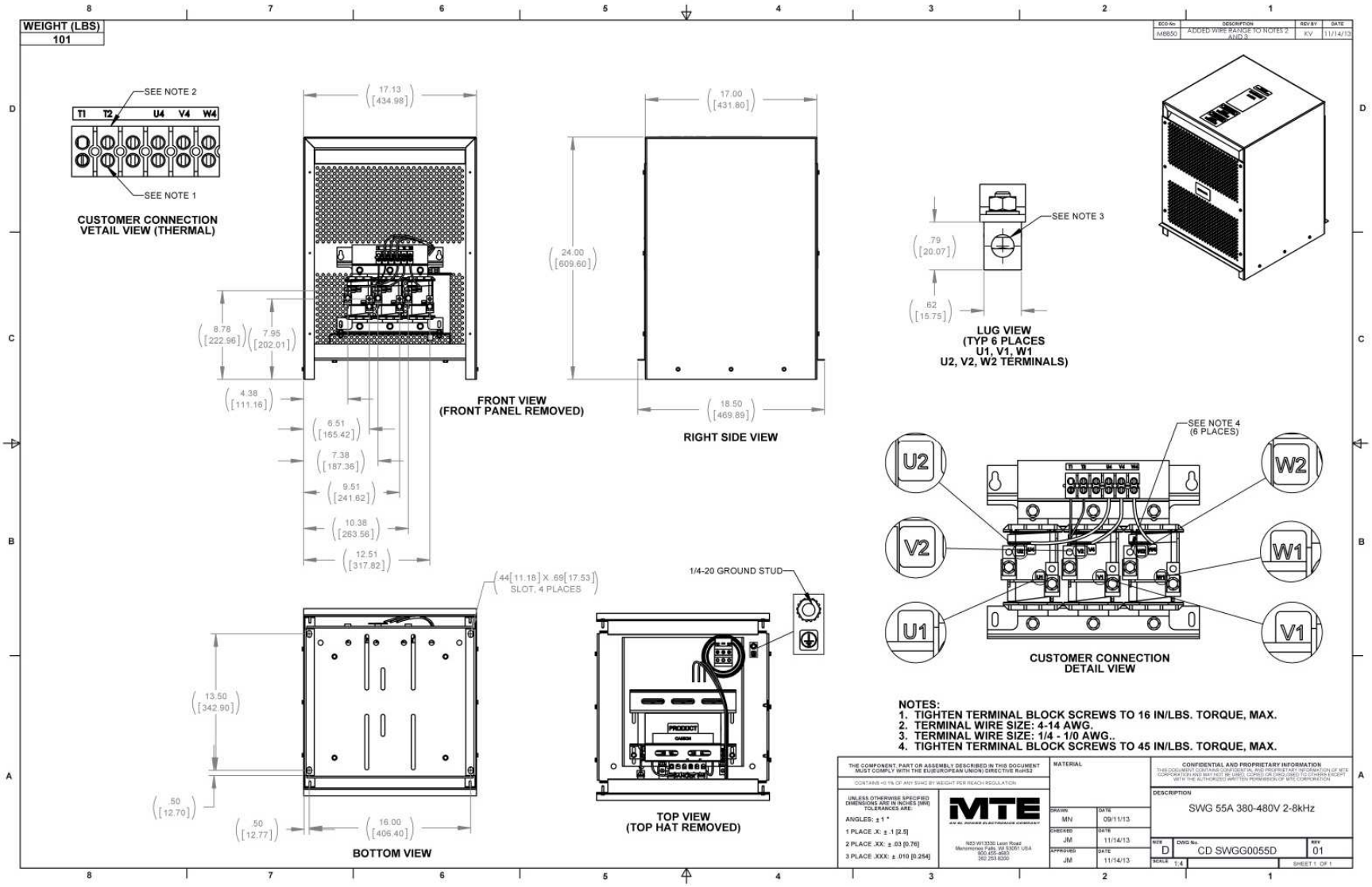

Figure A- 37: SWGG0055D

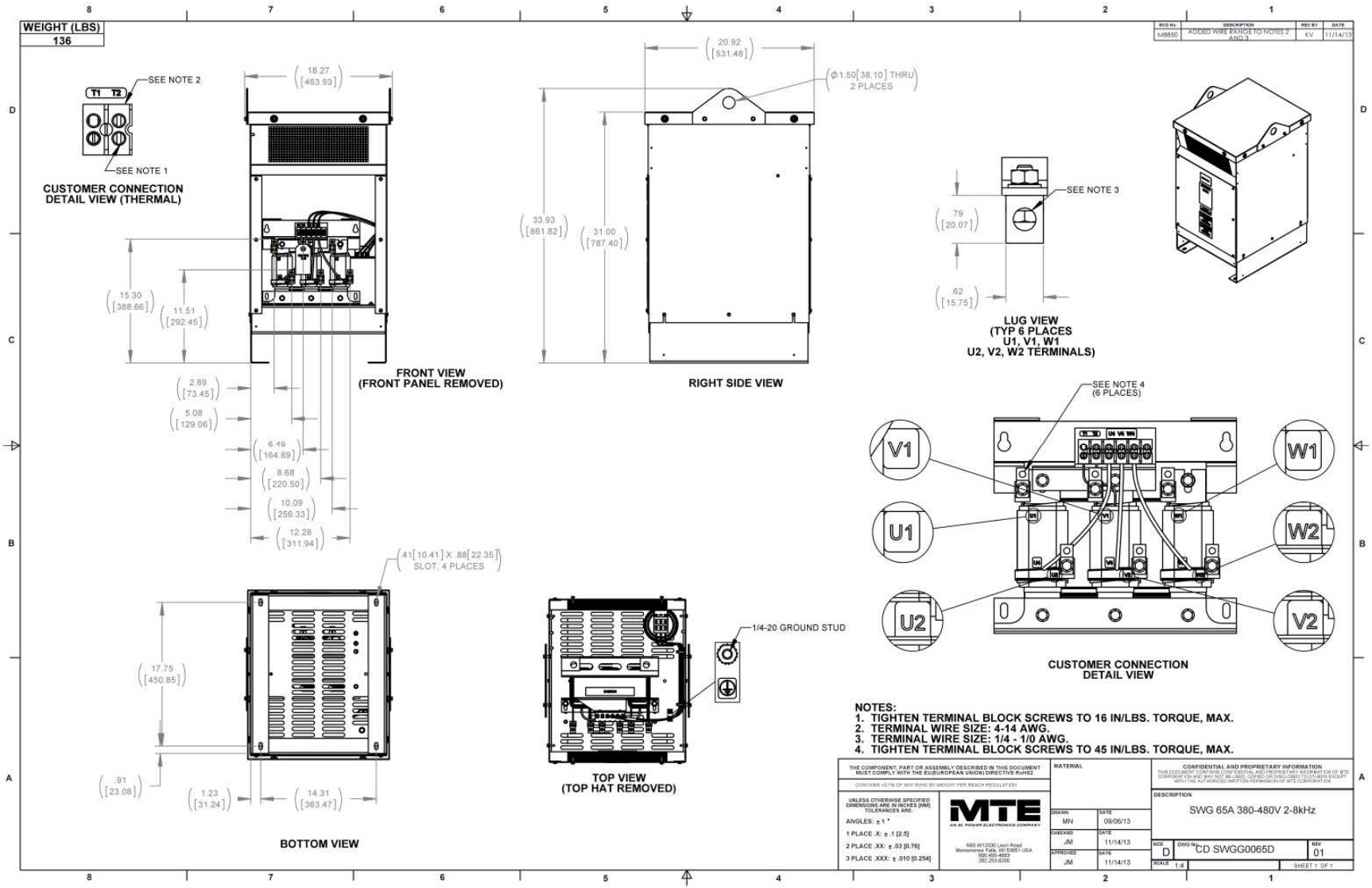

Figure A- 38: SWGG0065D

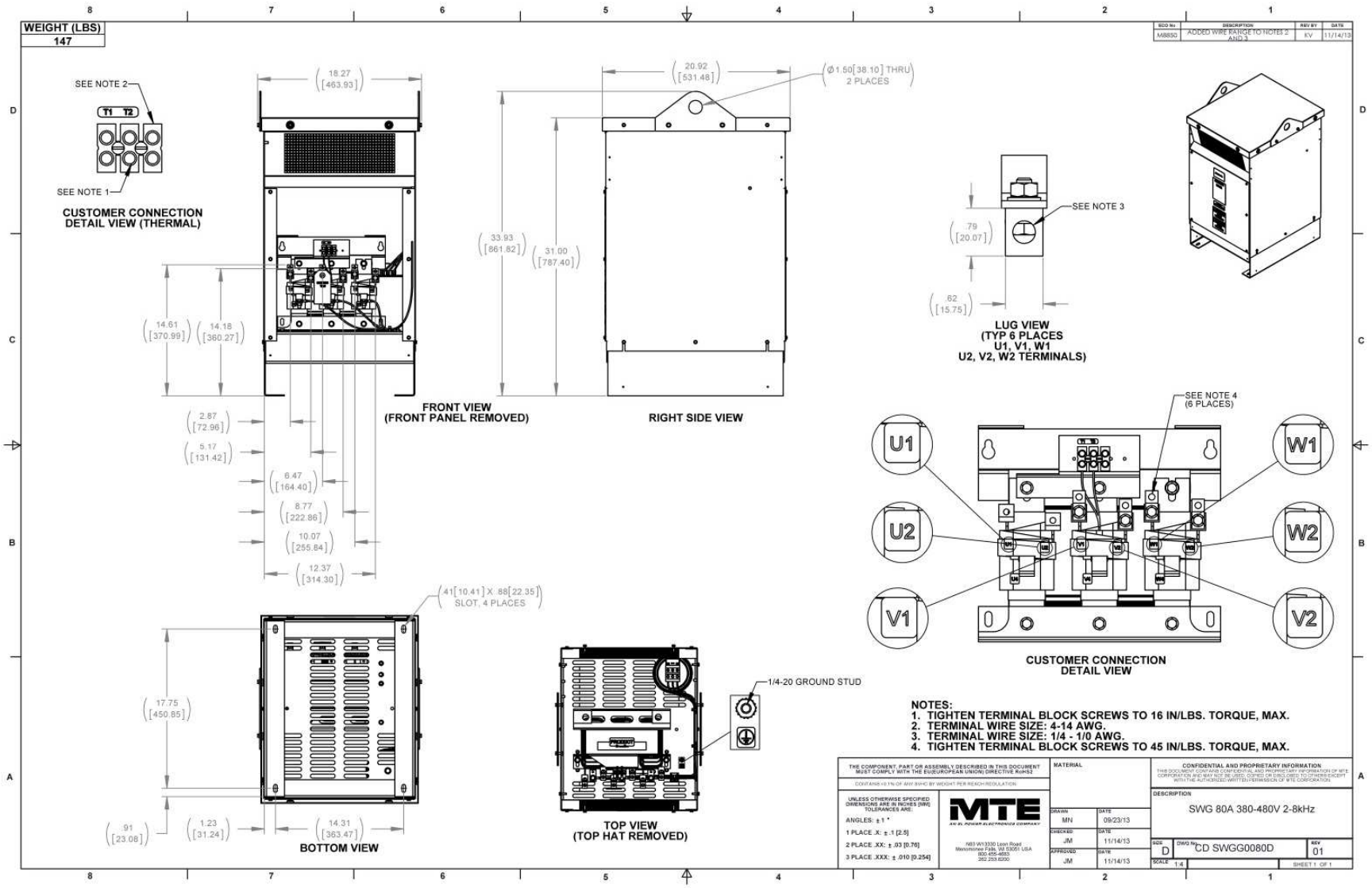

Figure A- 39: SWGG0080D

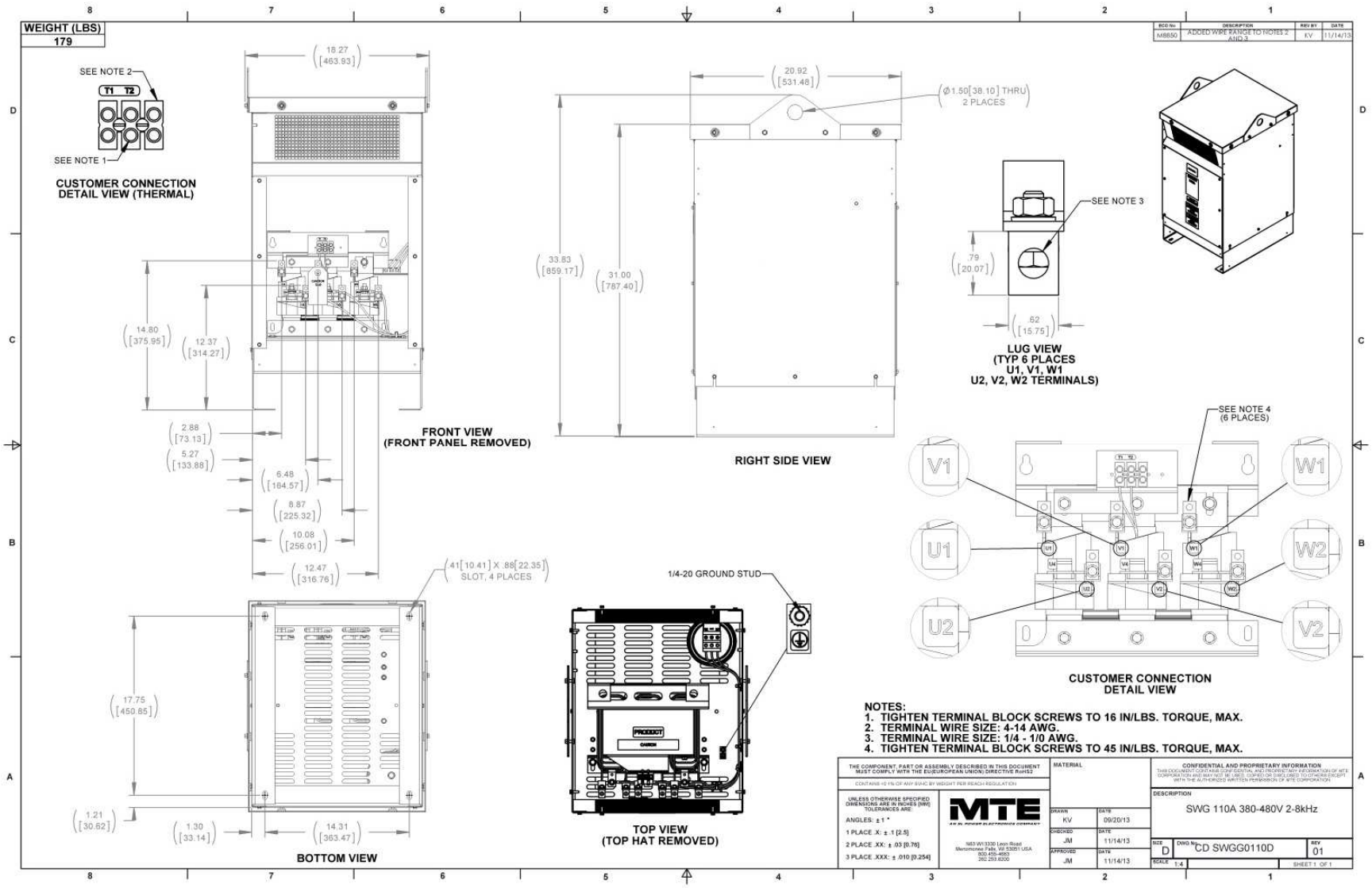

Figure A- 40: SWGG0110D

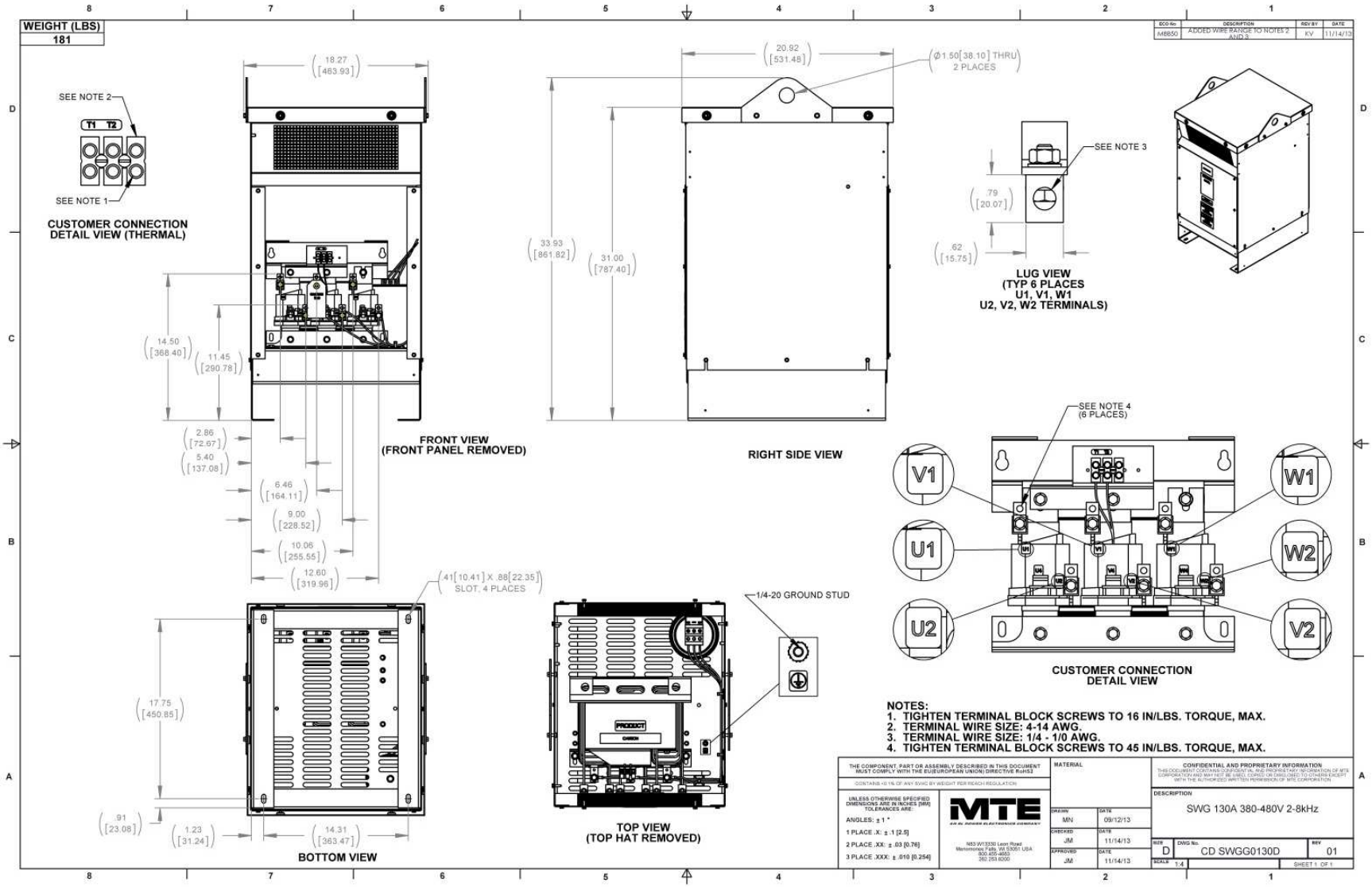

Figure A- 41: SWGG0130D

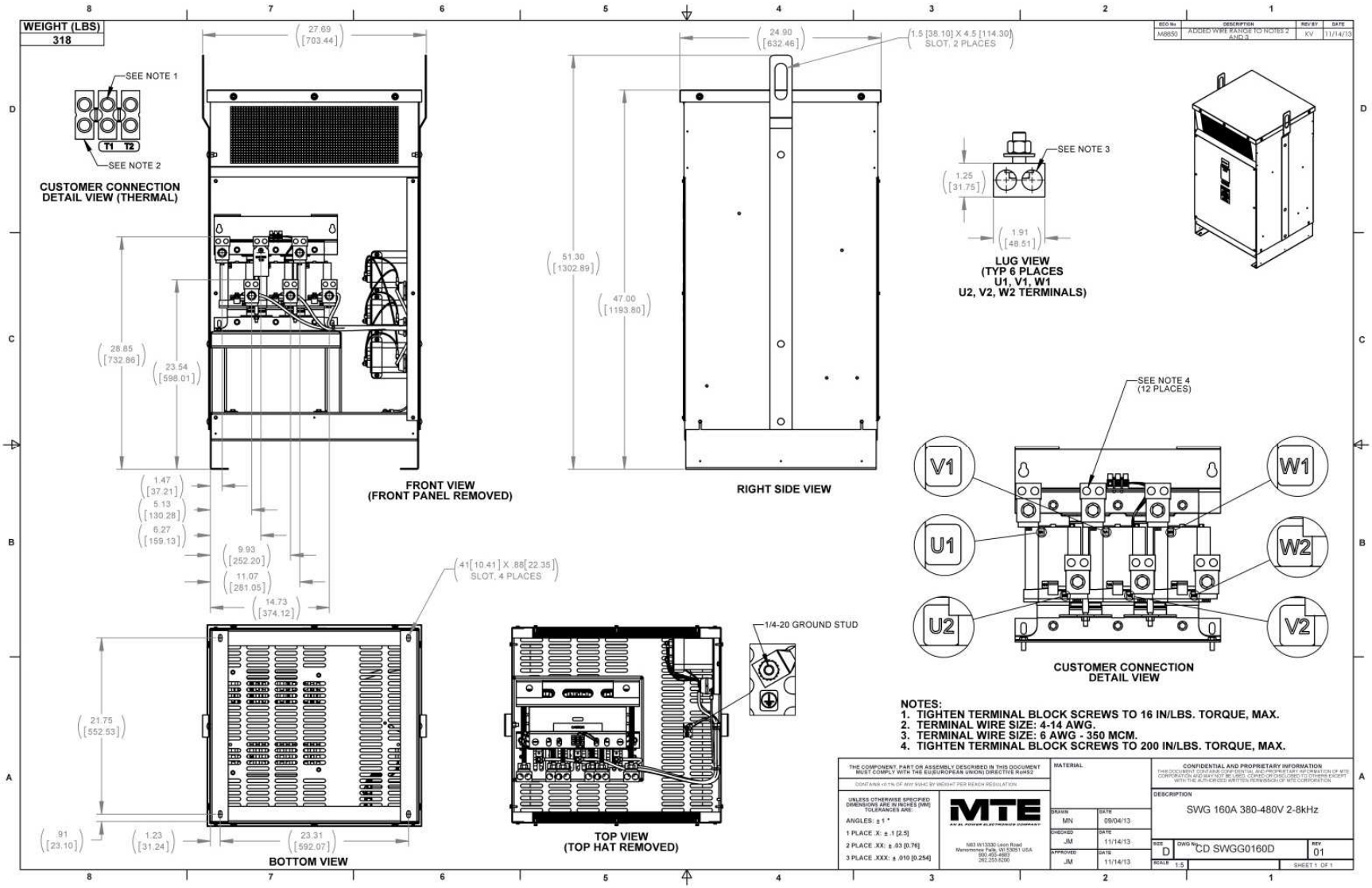

Figure A- 42: SWGG0160D

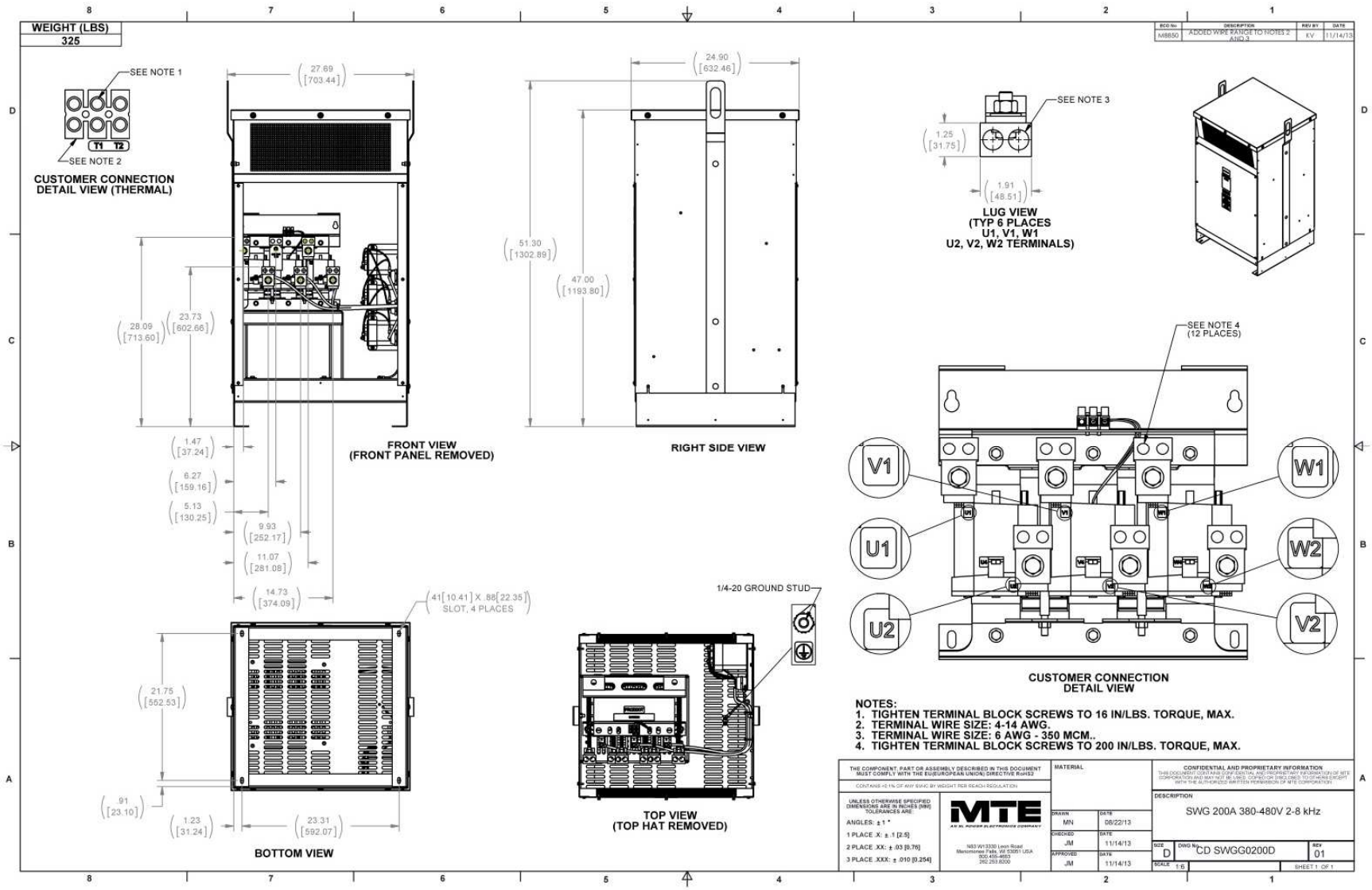

Figure A- 43: SWGG0200D

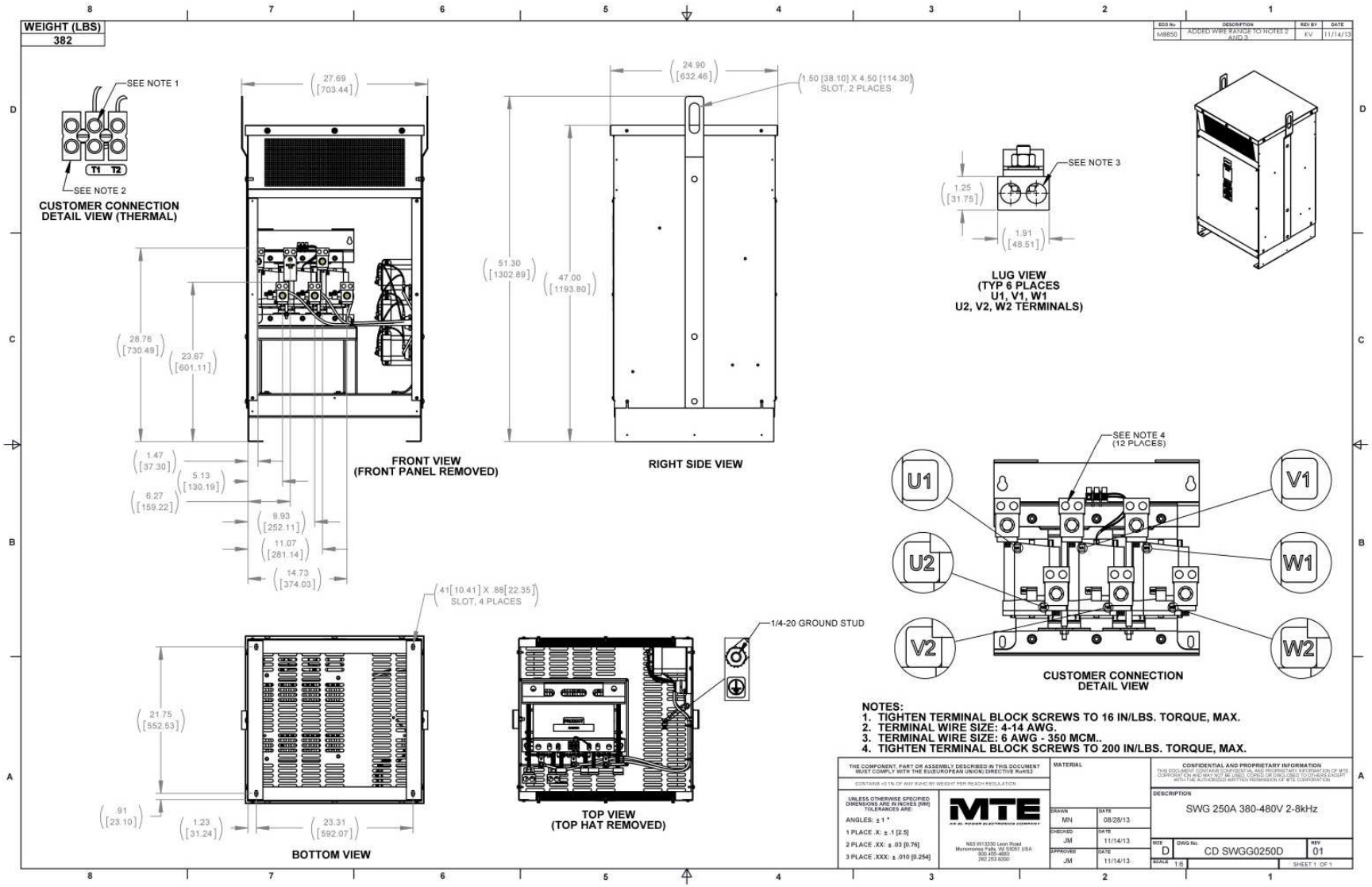

Figure A- 44: SWGG0250D

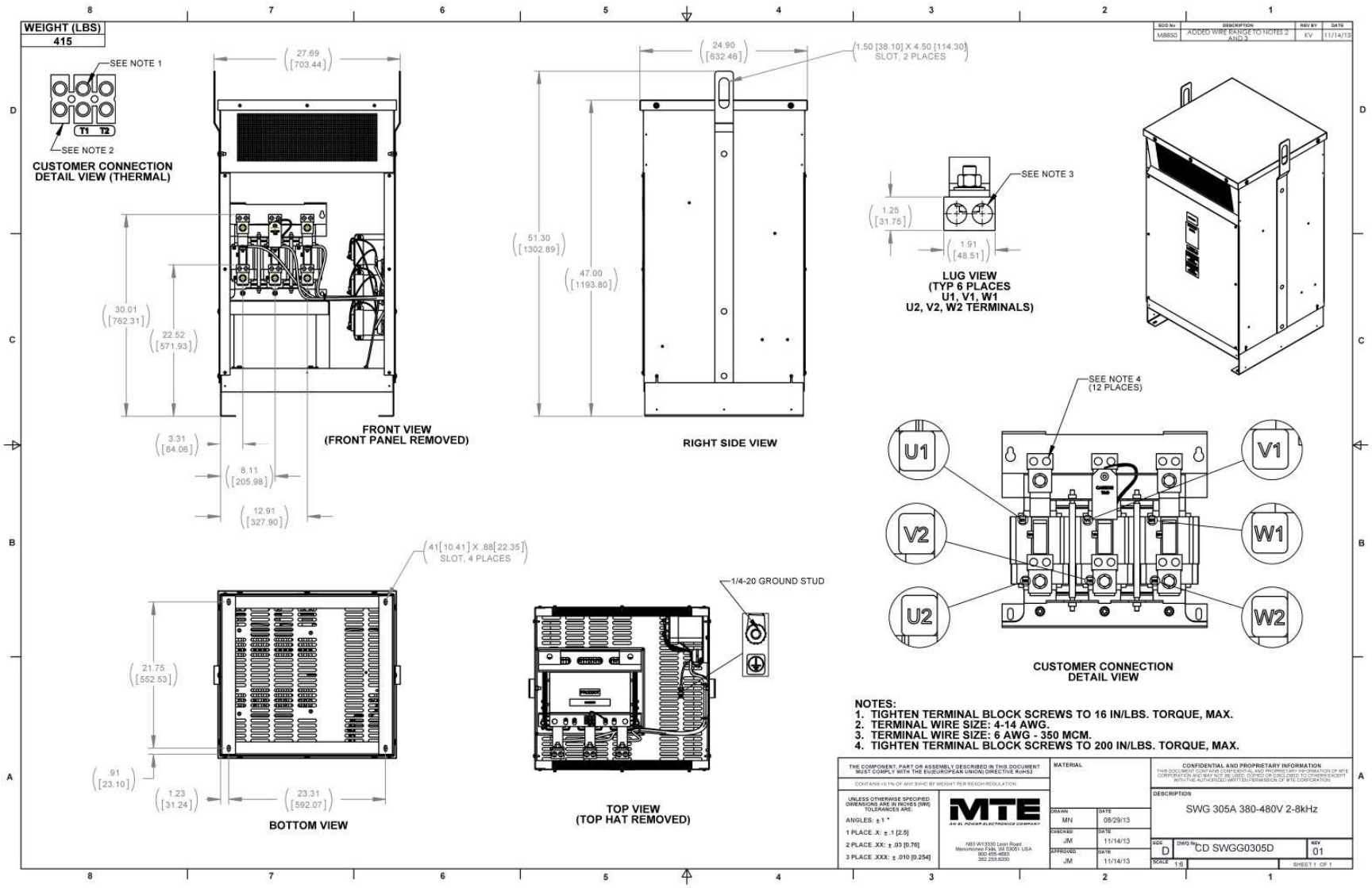

Figure A- 45: SWGG0305D

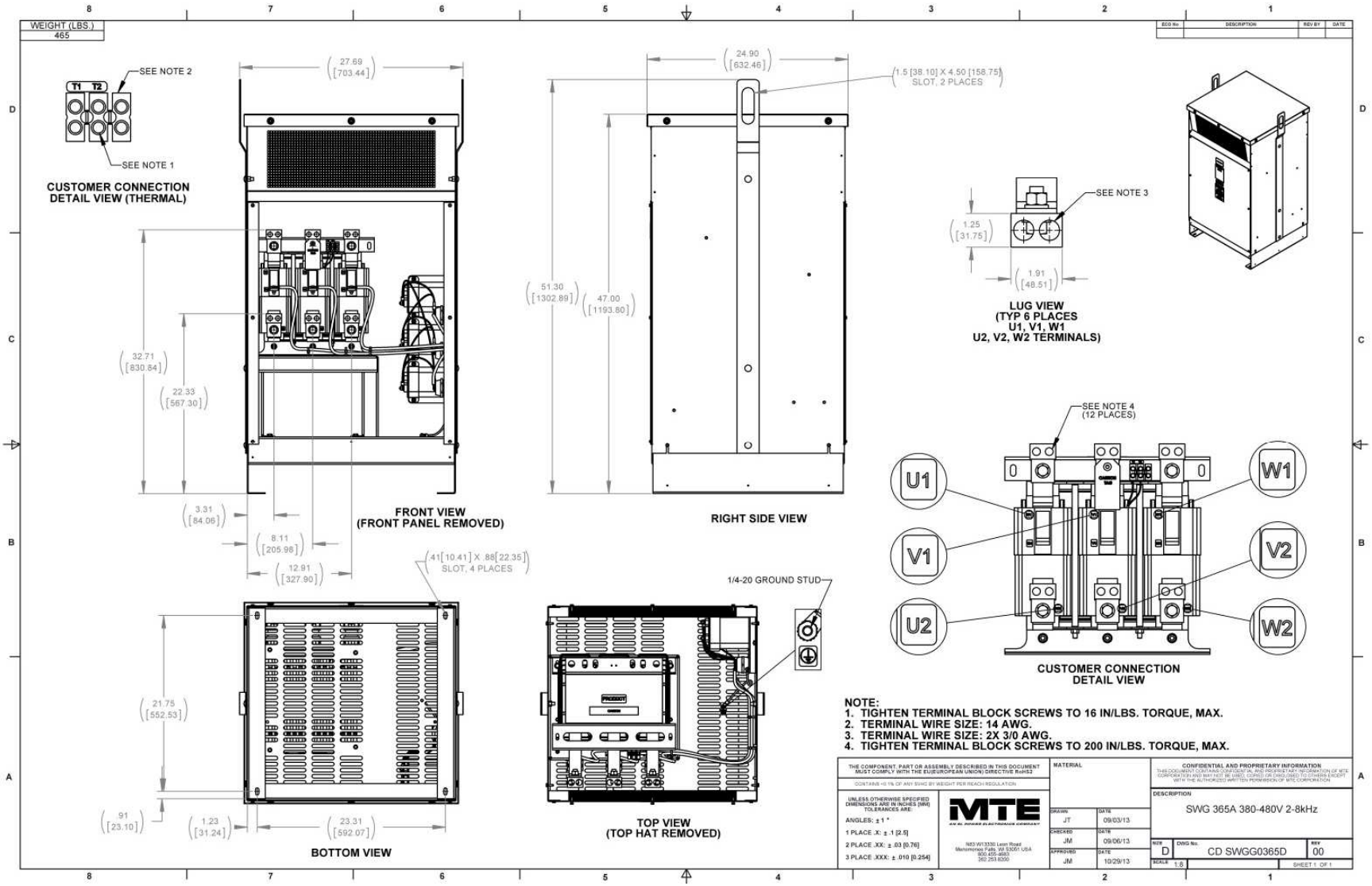

Figure A- 46: SWGG0365D

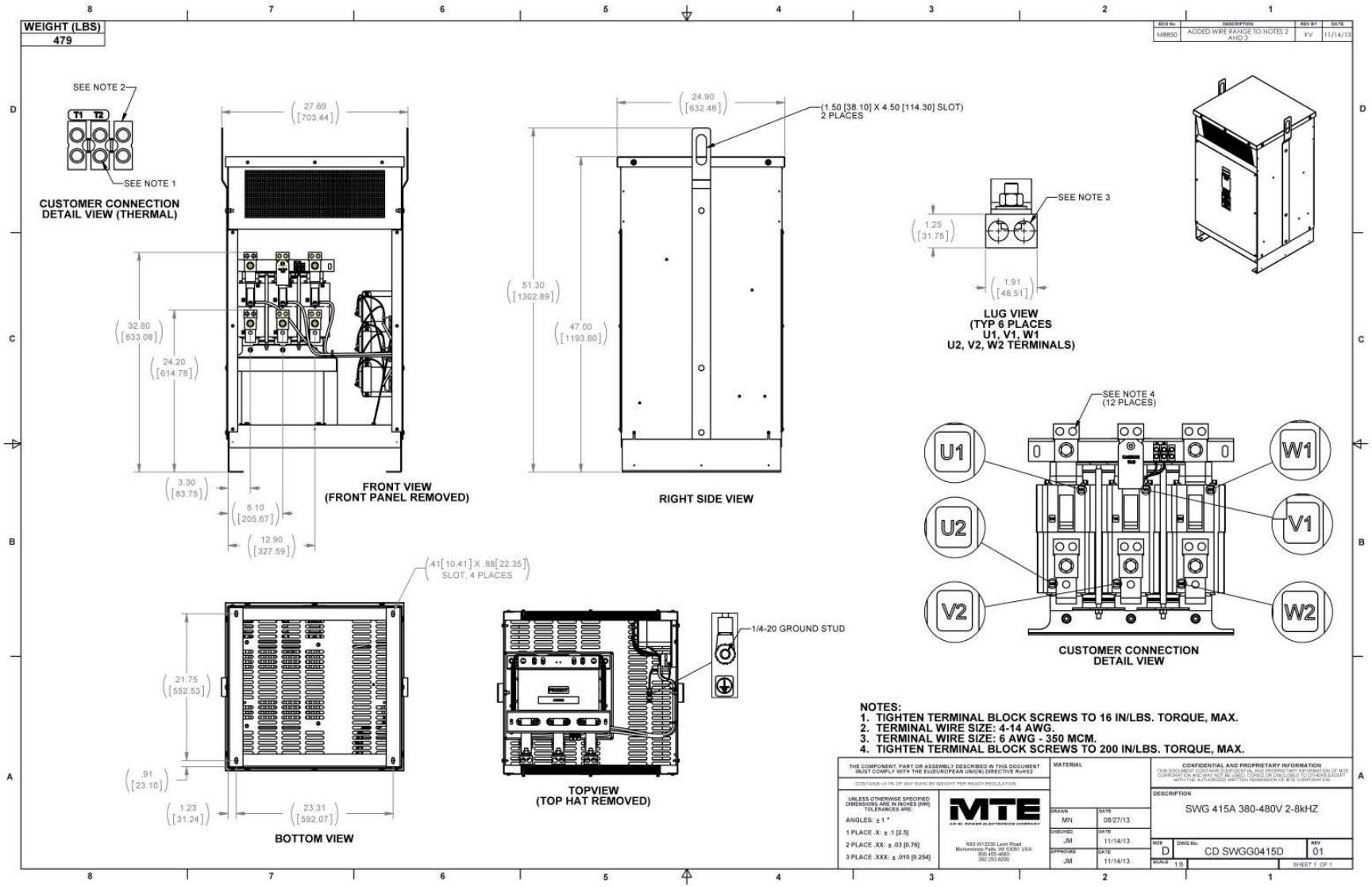

Figure A- 47: SWGG0415D

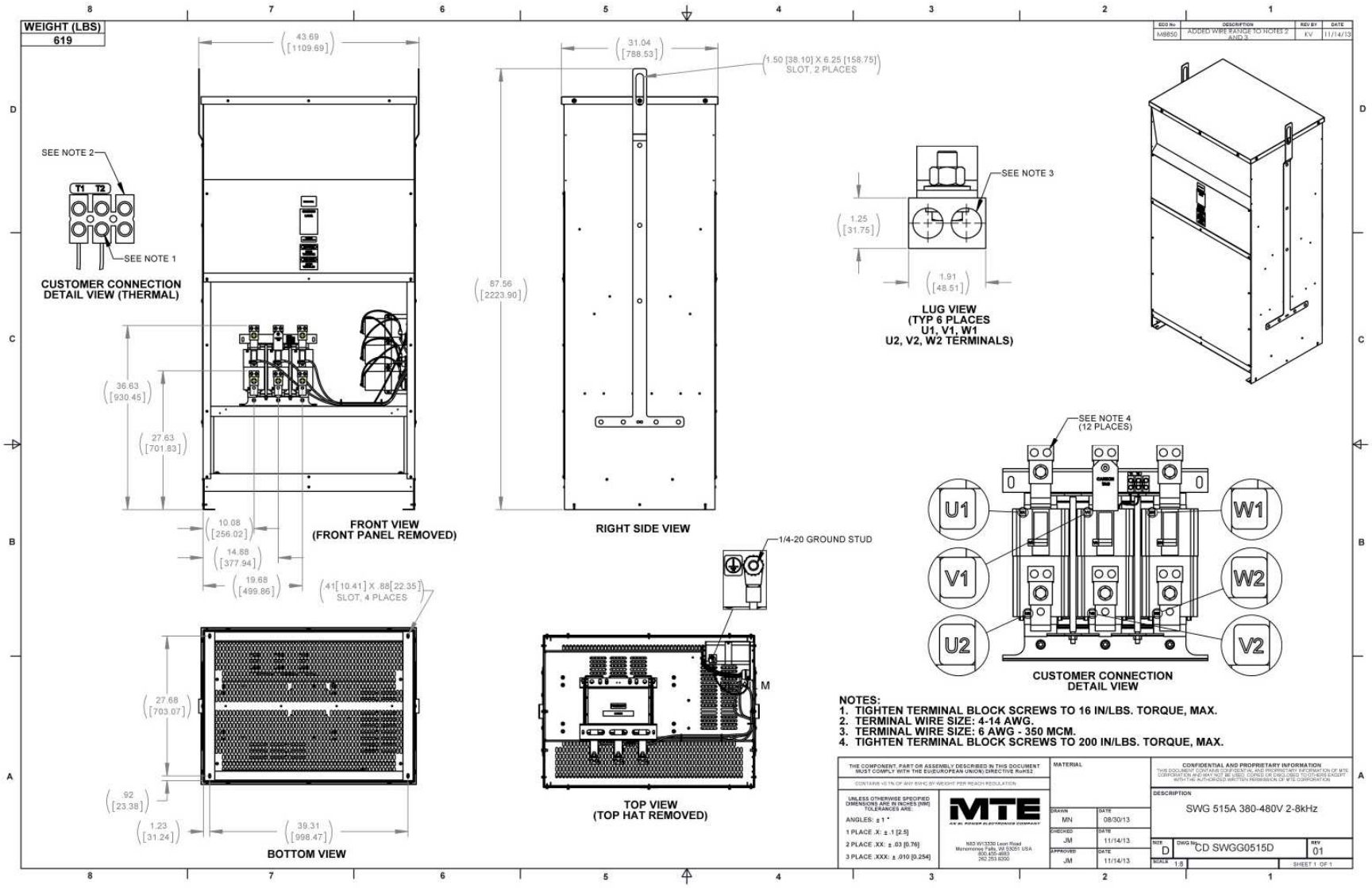

Figure A- 48: SWGG0515D

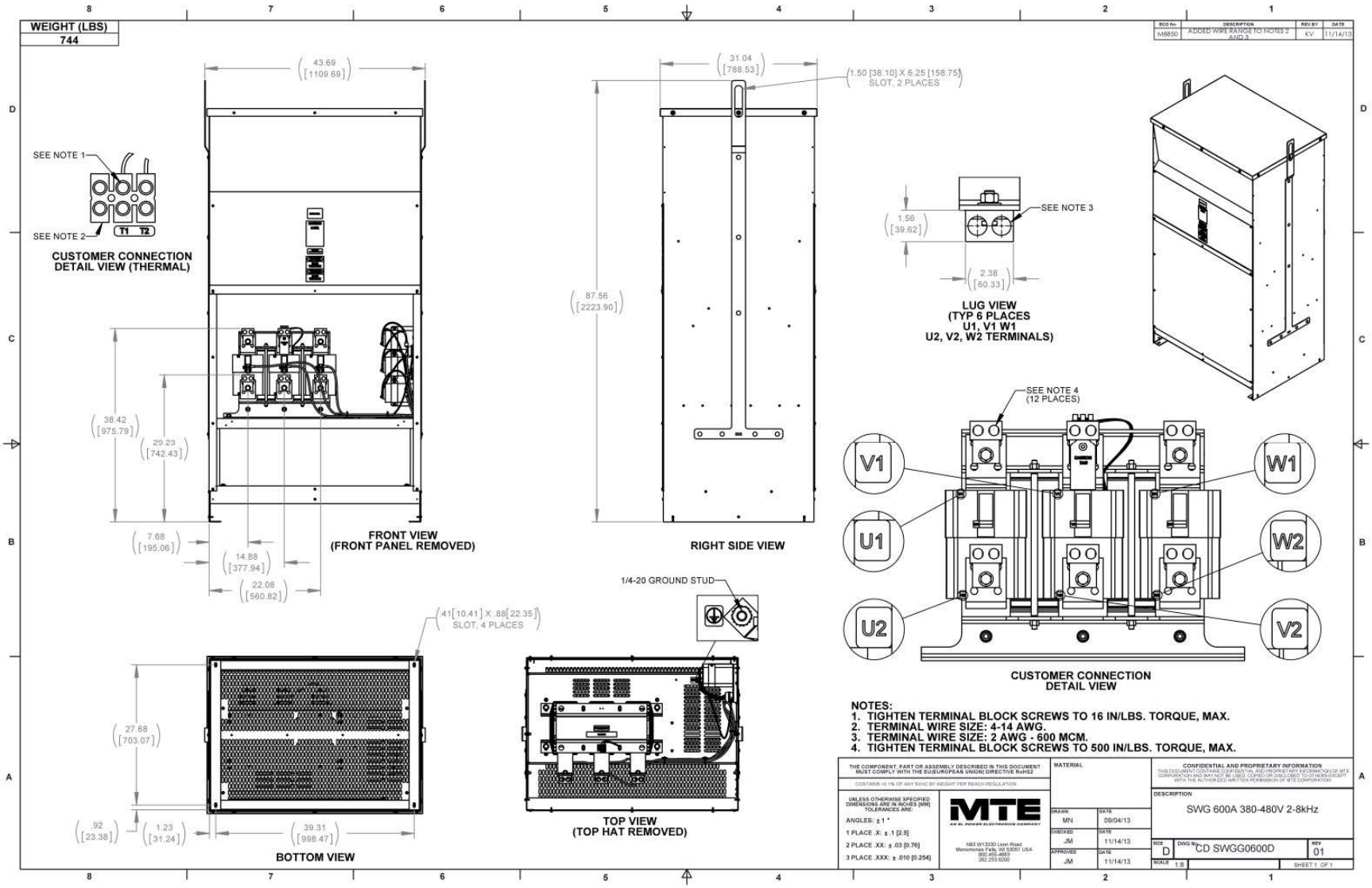

Figure A- 49: SWGG0600D

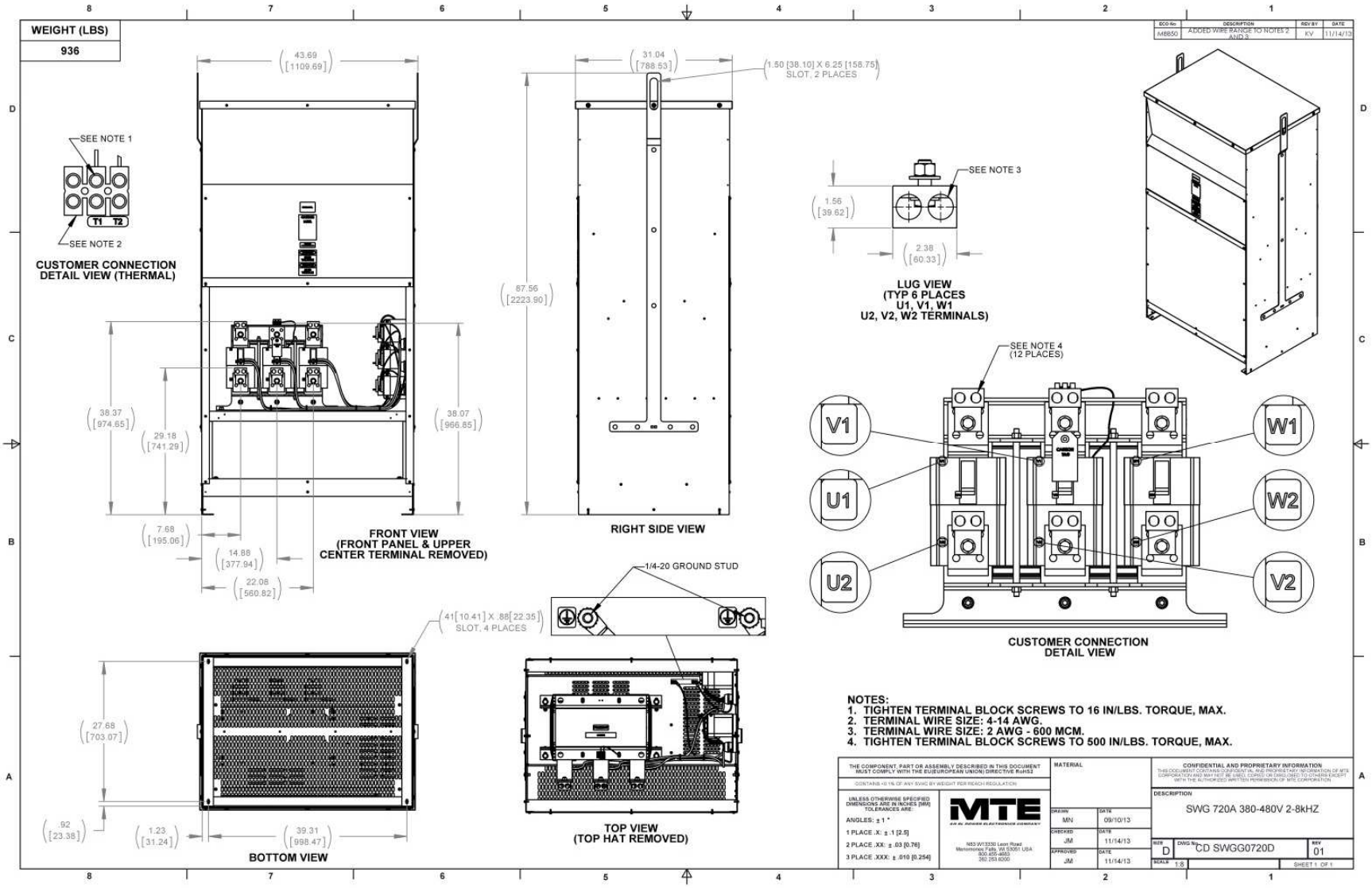

Figure A- 50: SWGG0720D

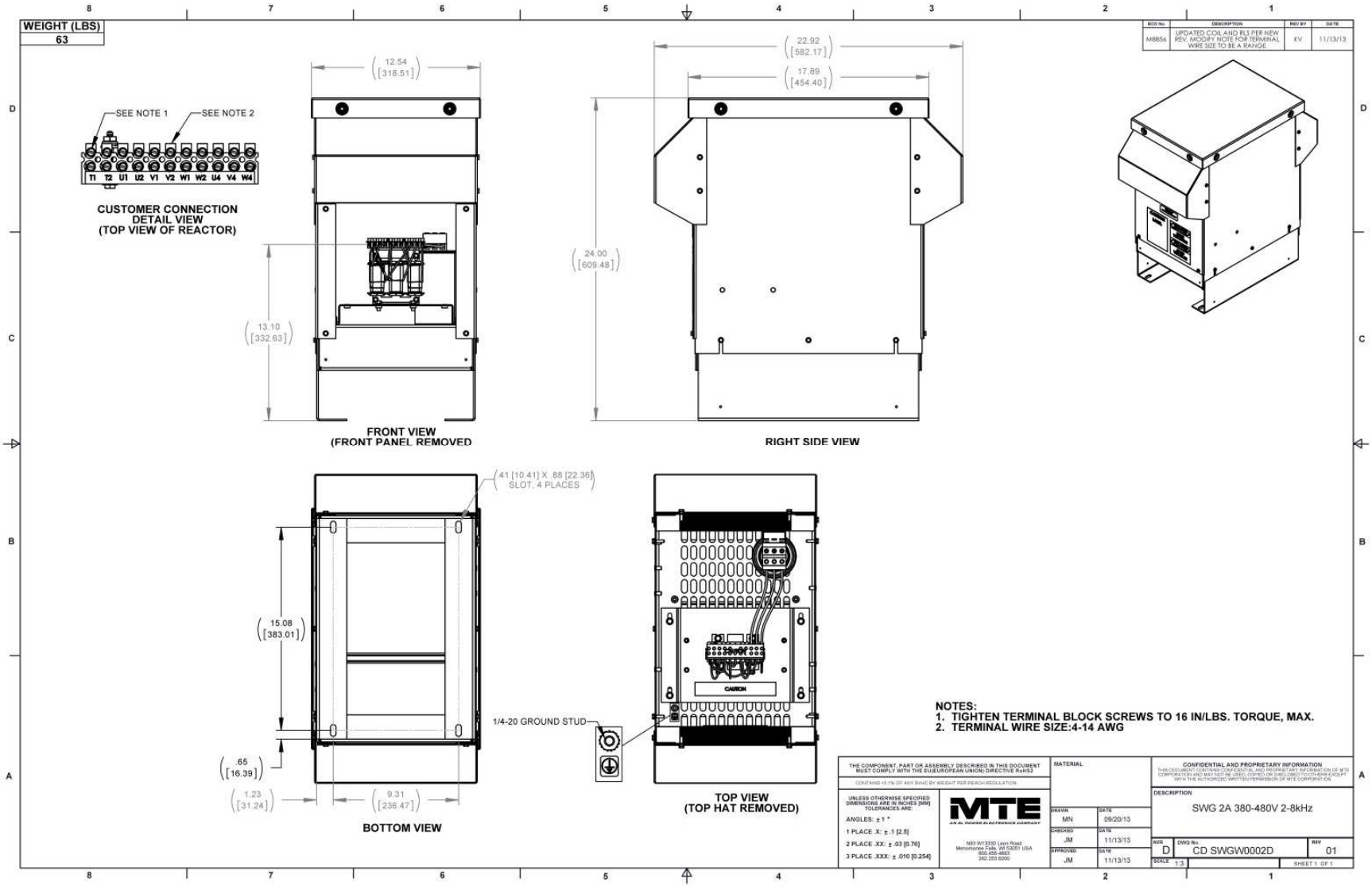

Figure A- 51: SWGW0002D

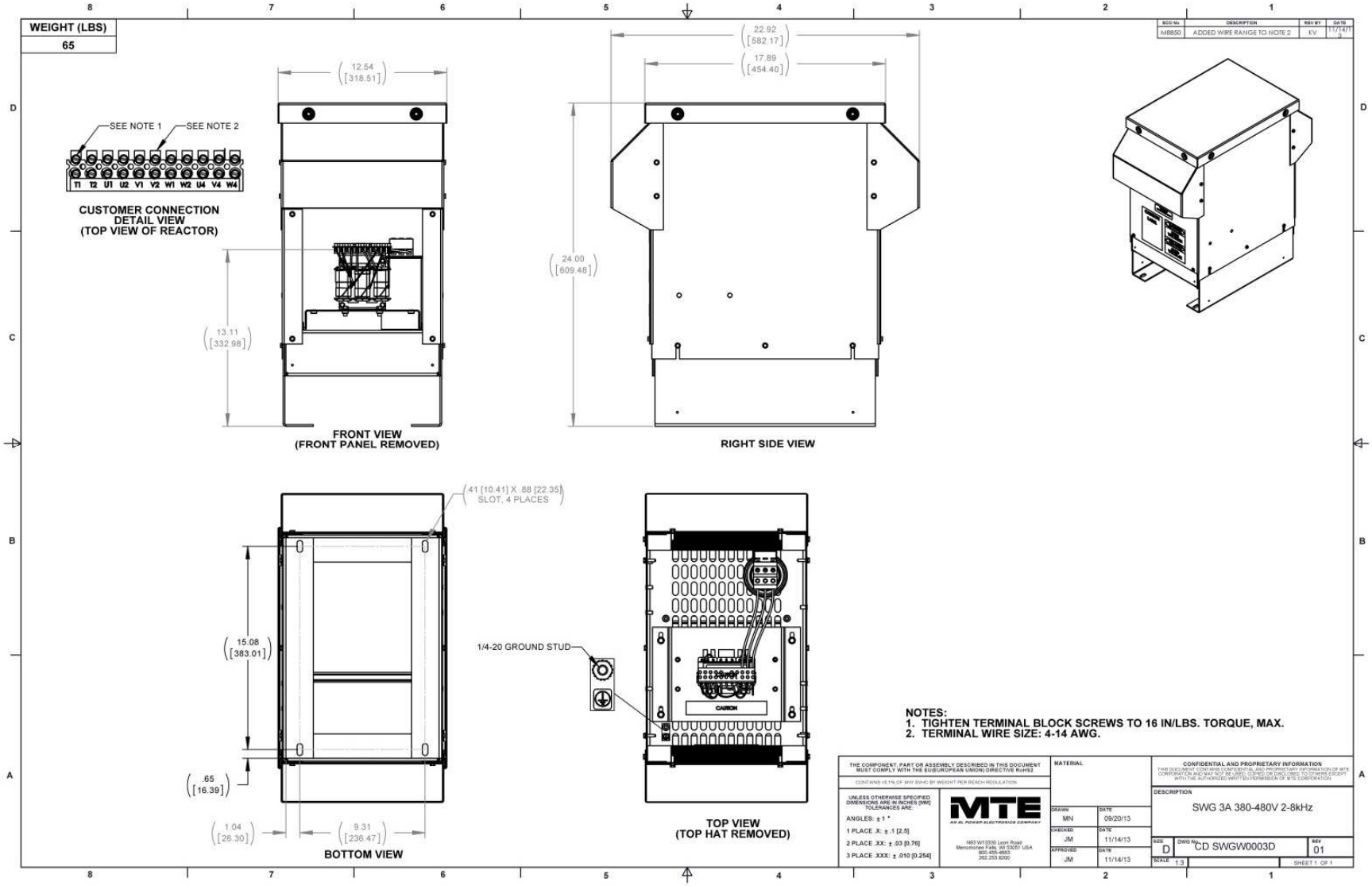

Figure A- 52: SWGW0003D

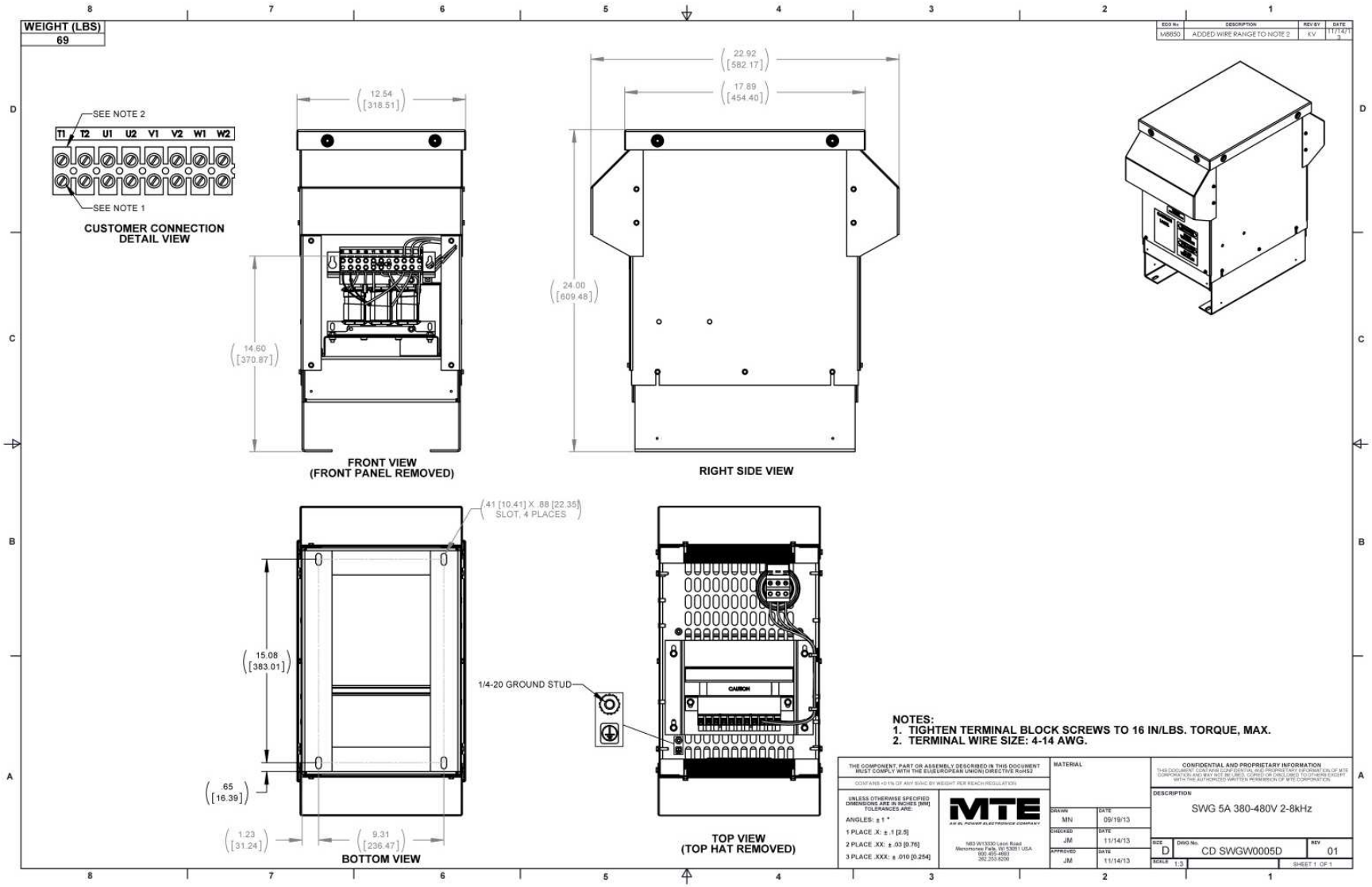

Figure A- 53: SWGW0005D

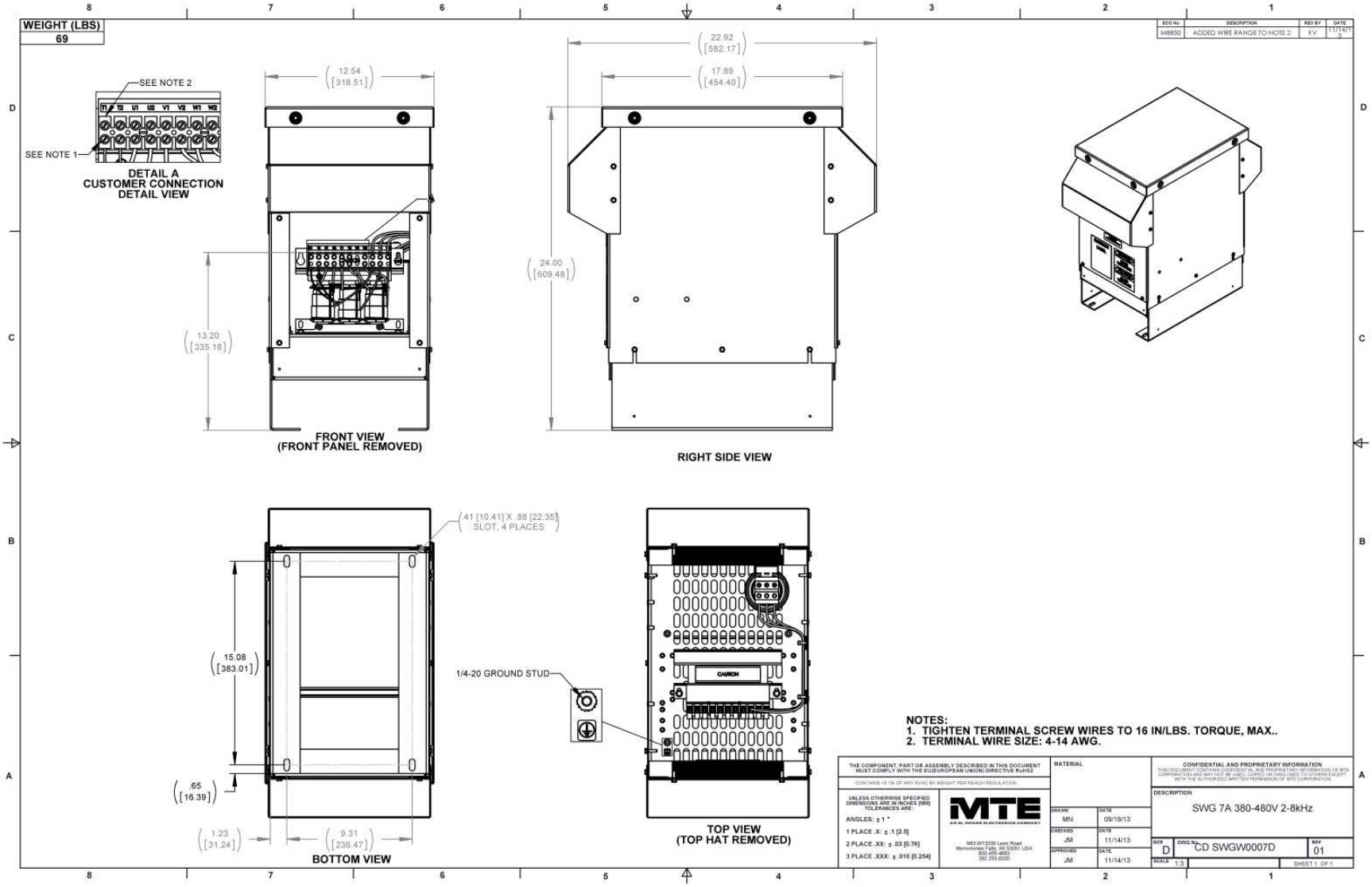

Figure A- 54: SWGW0007D

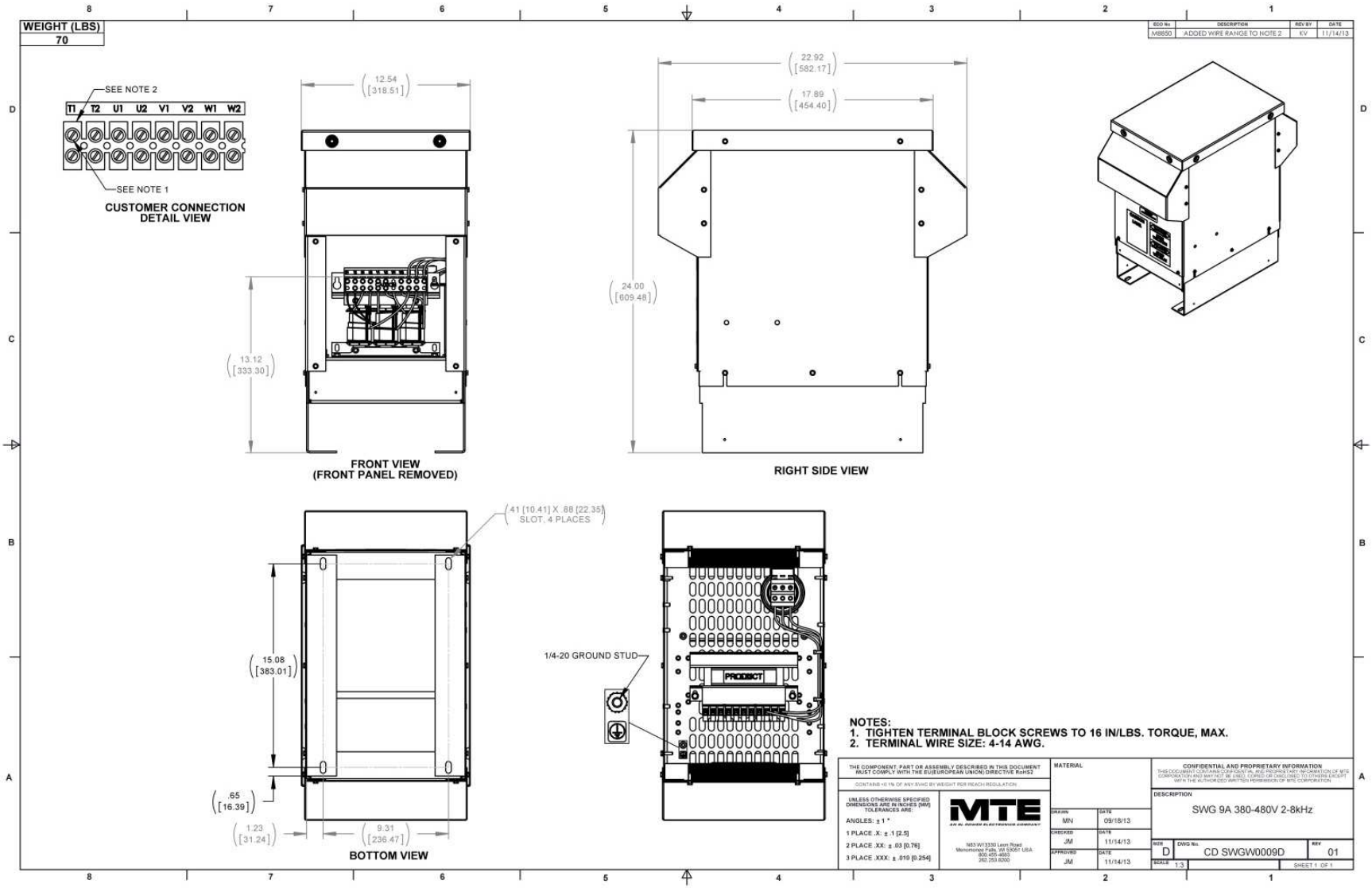

Figure A- 55: SWGW0009D

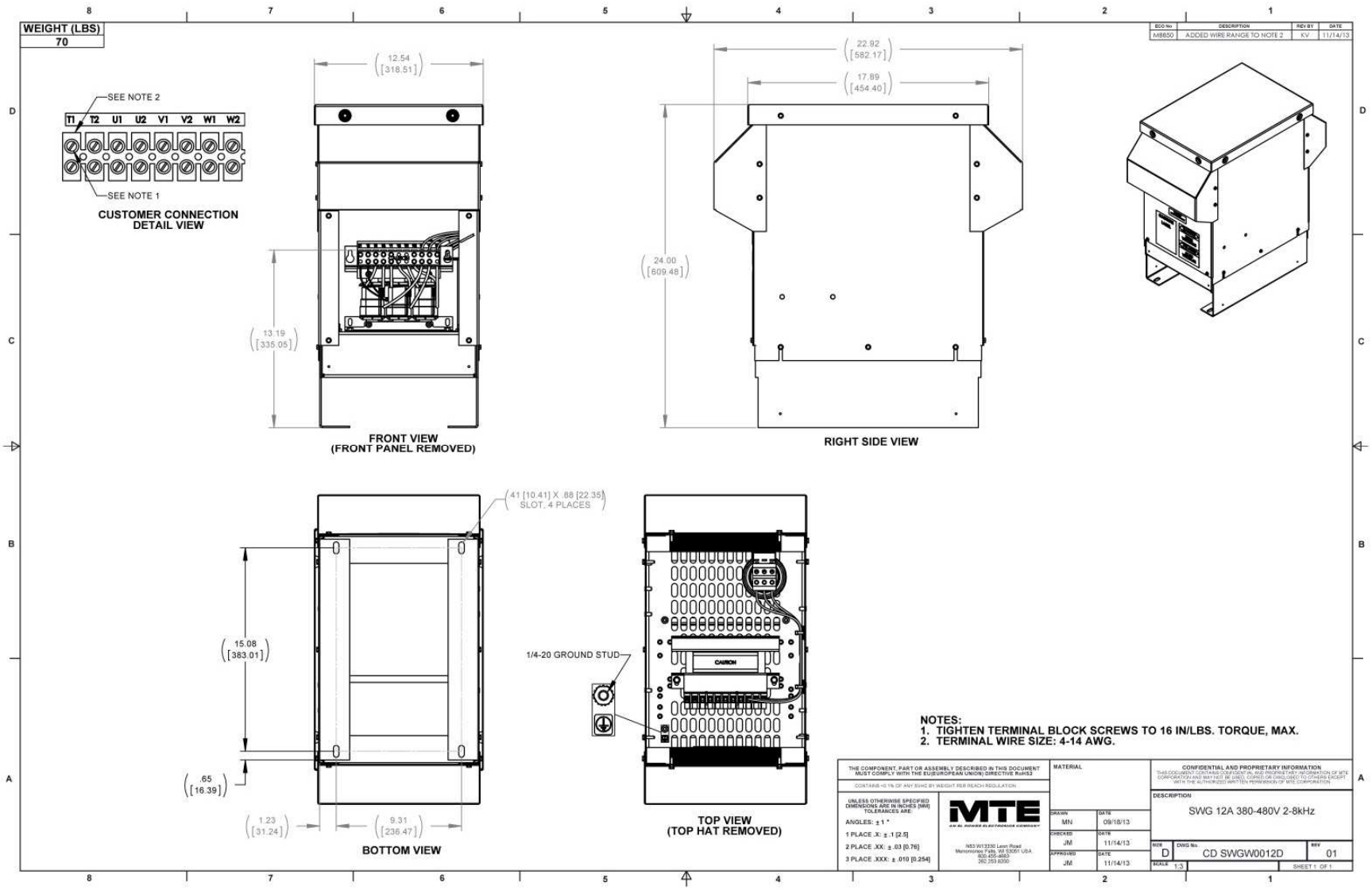

Figure A- 56: SWGW0012D

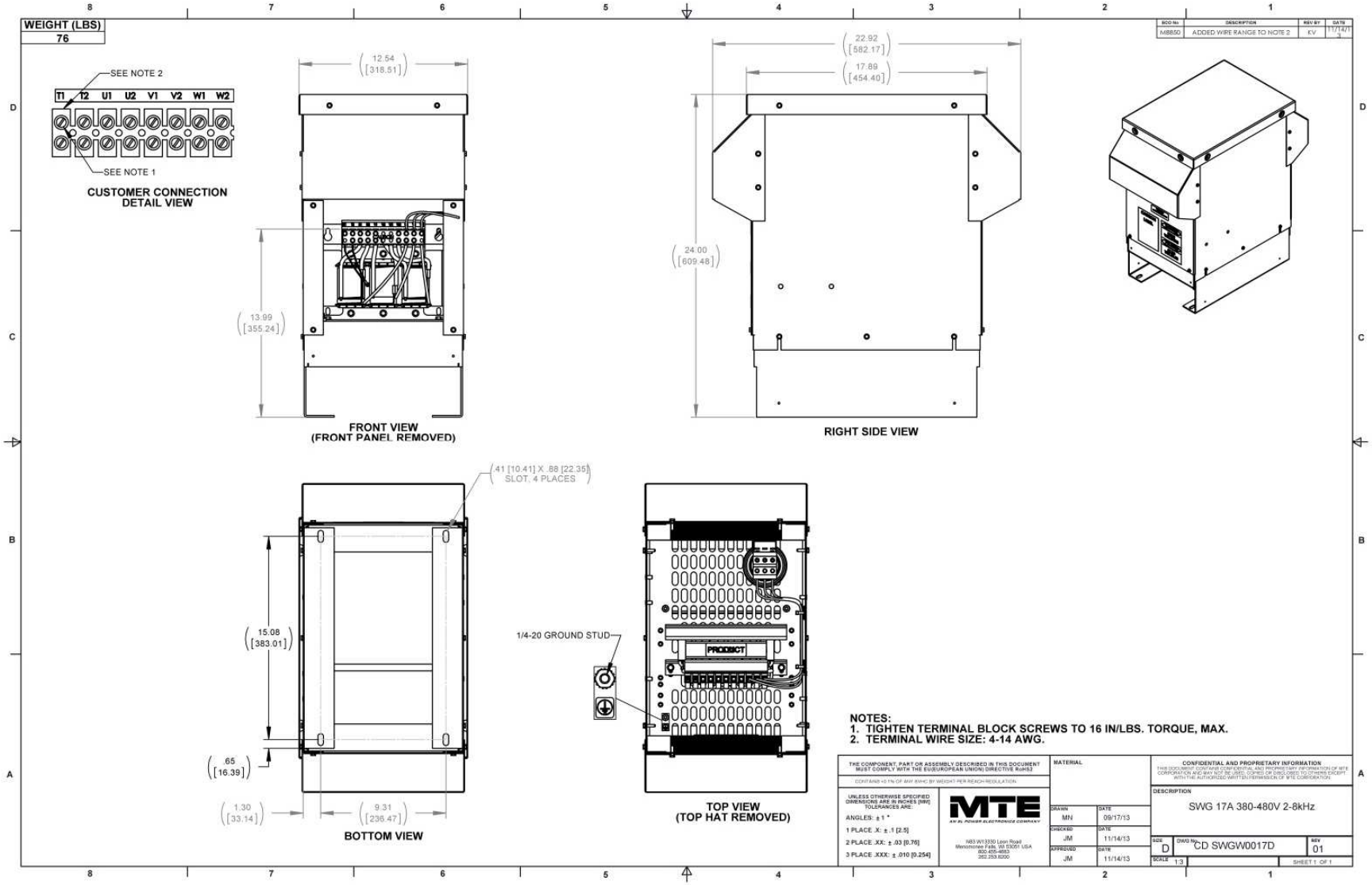

Figure A- 57: SWGW0017D

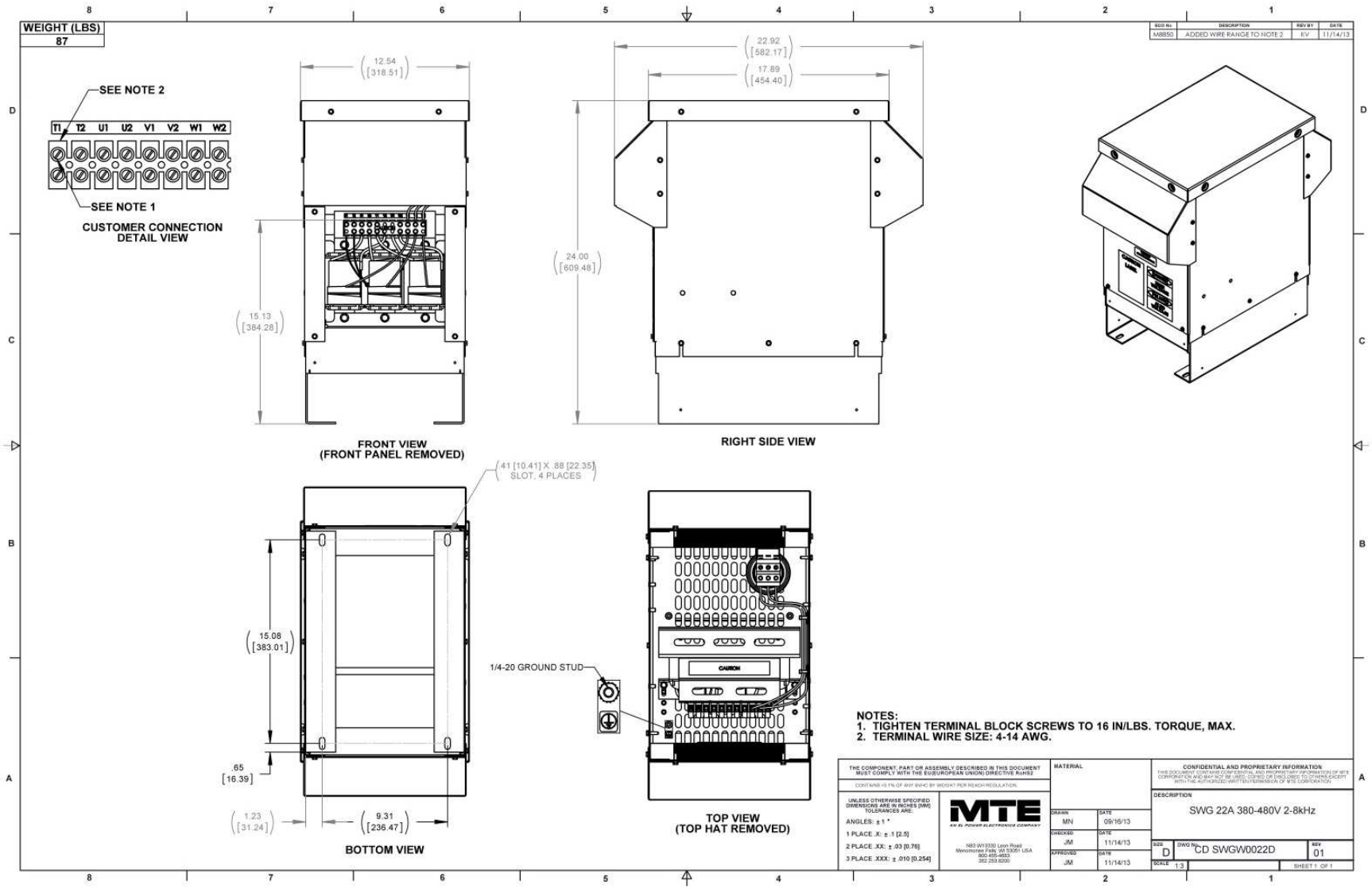

Figure A- 58: SWGW0022D

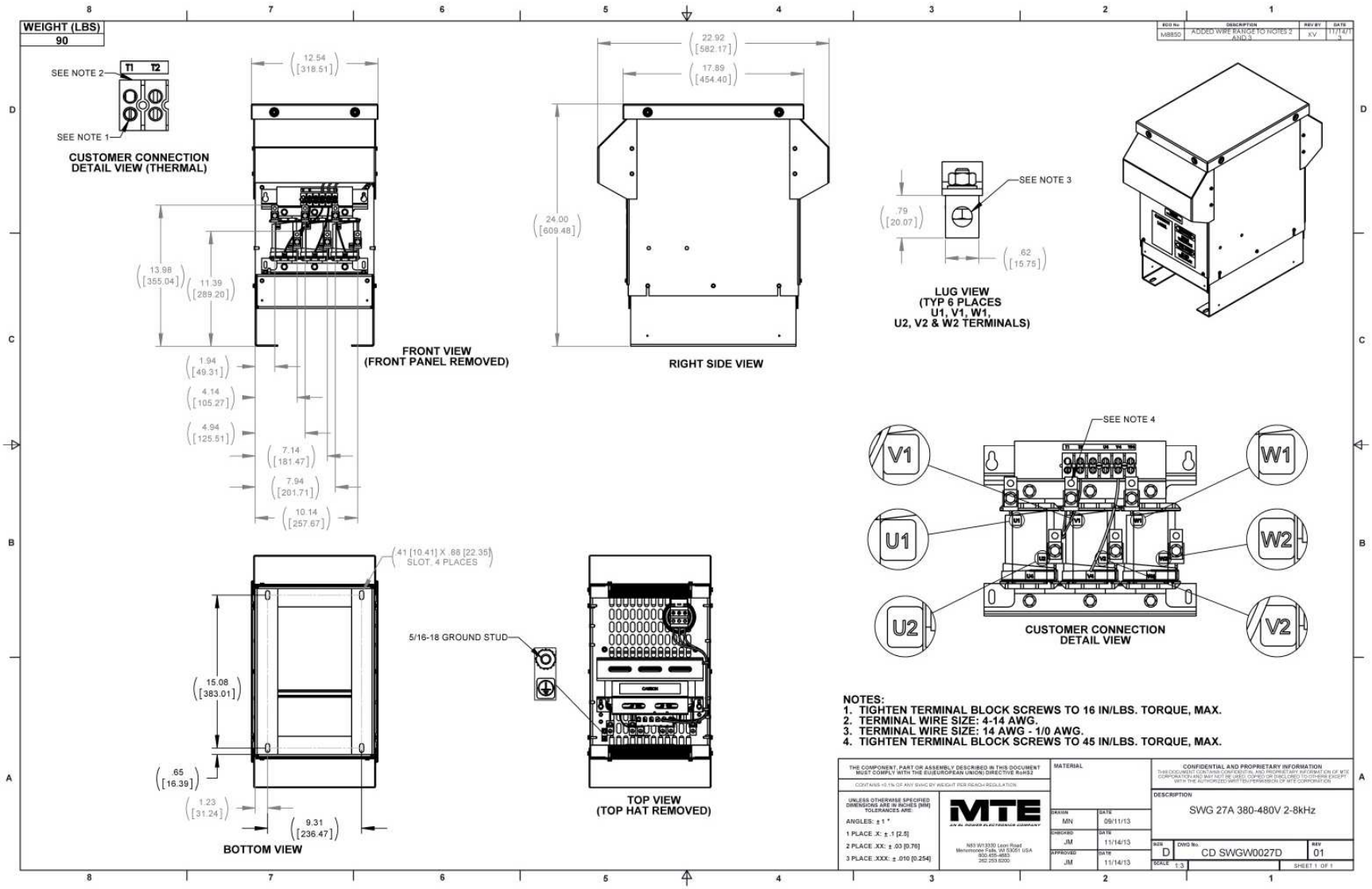

Figure A- 59: SWGW0027D

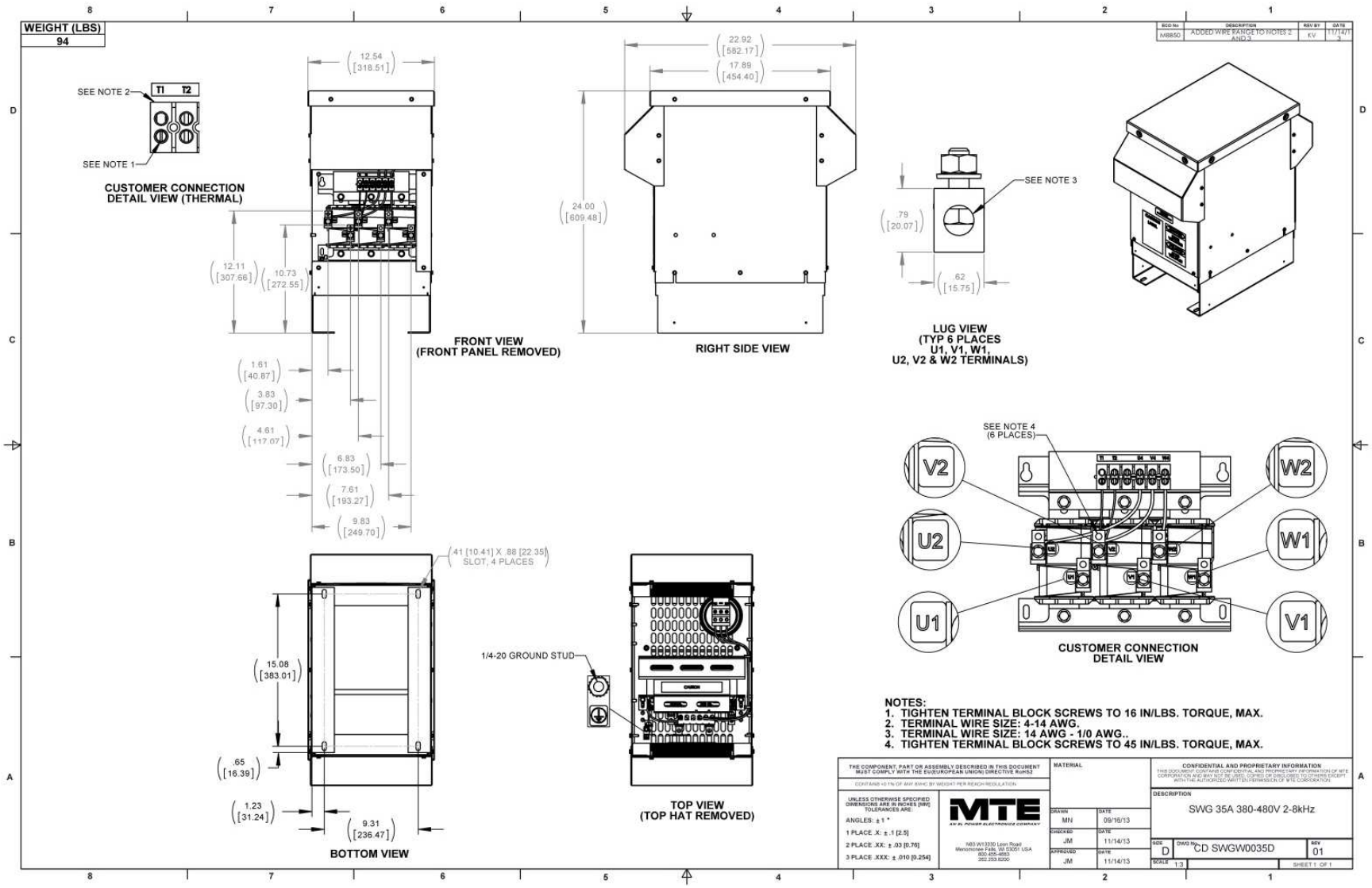

Figure A- 60: SWGW0035D

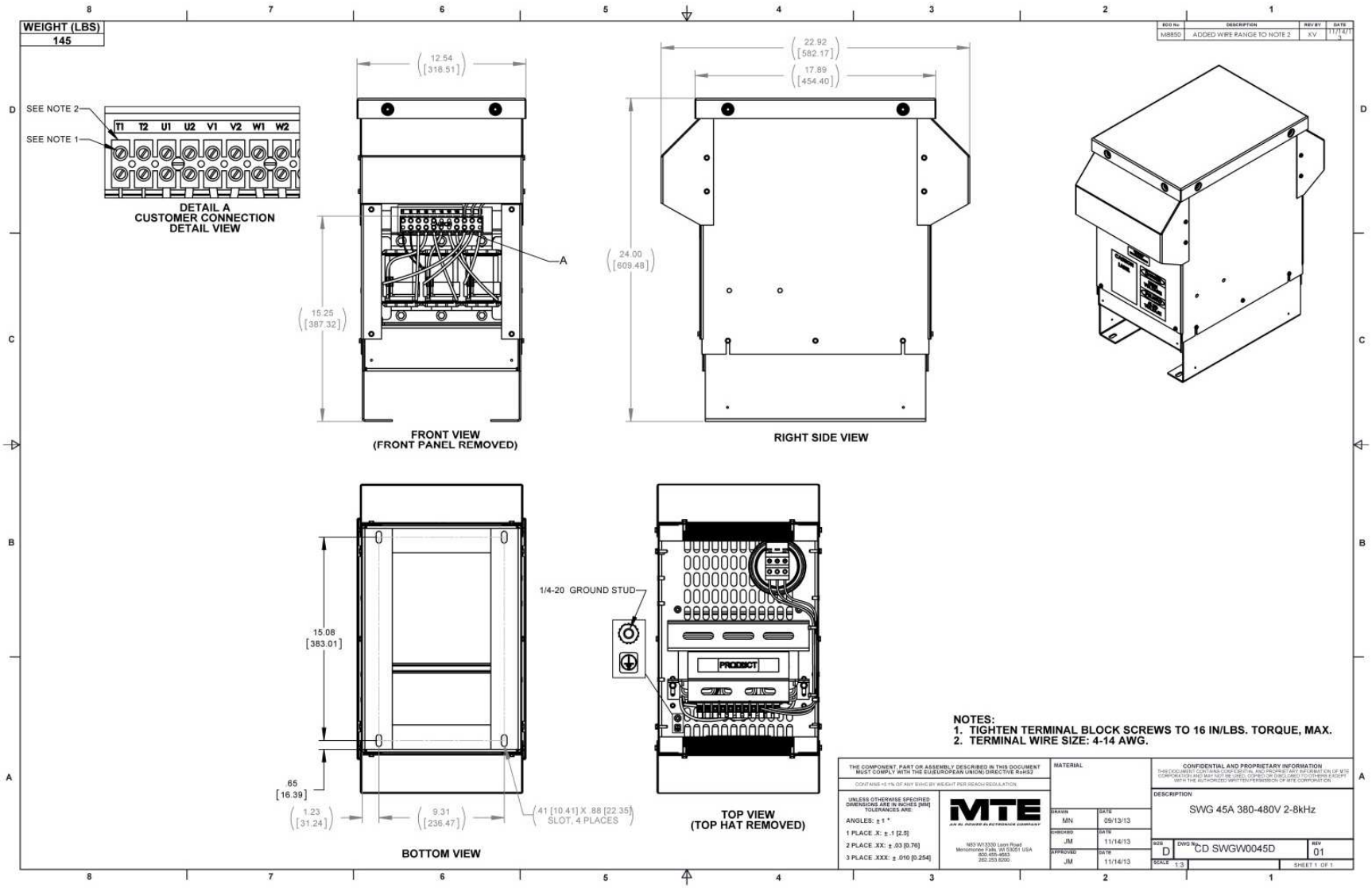

Figure A- 61: SWGW0045D

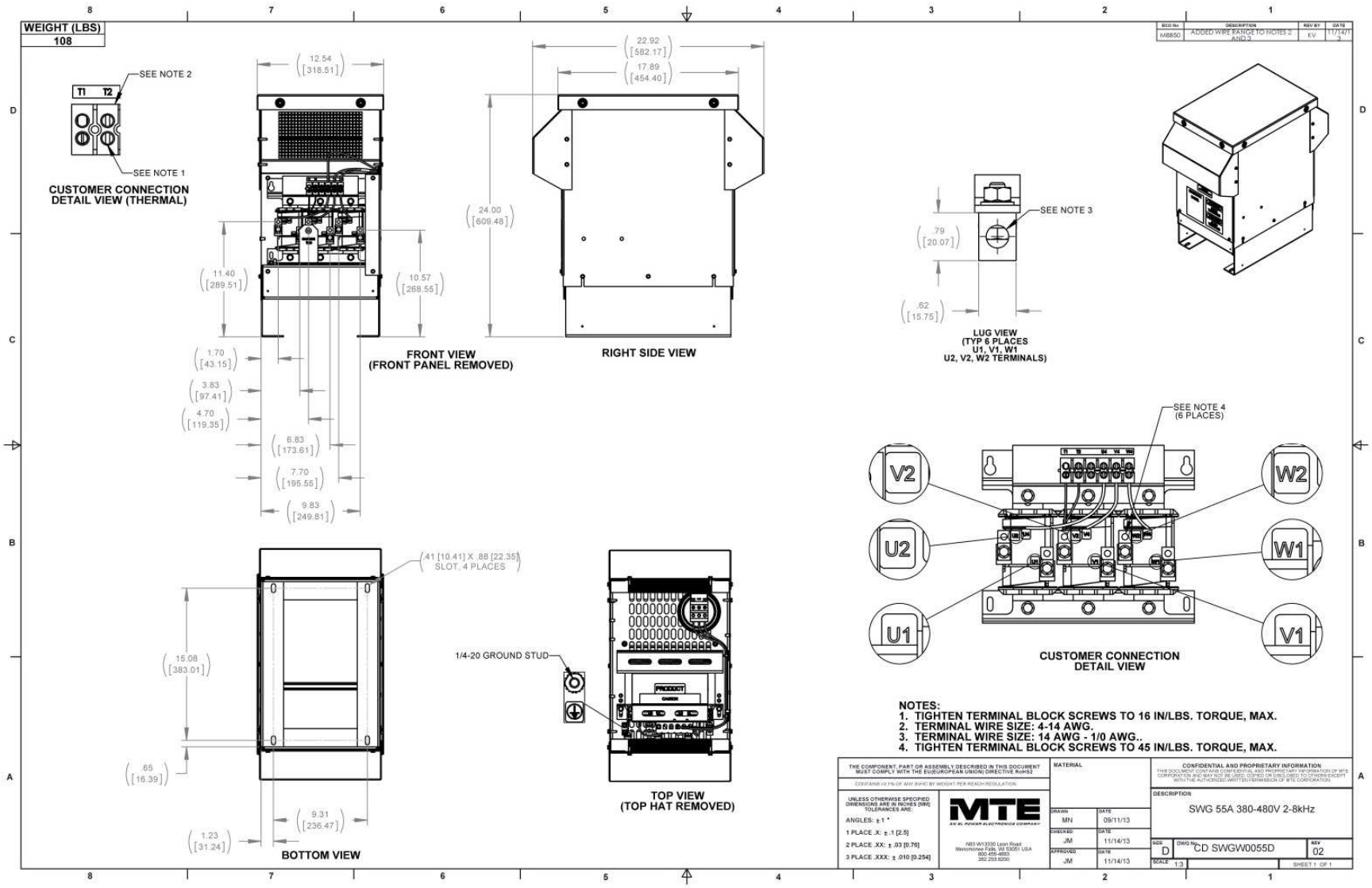

Figure A- 62: SWGW0055D

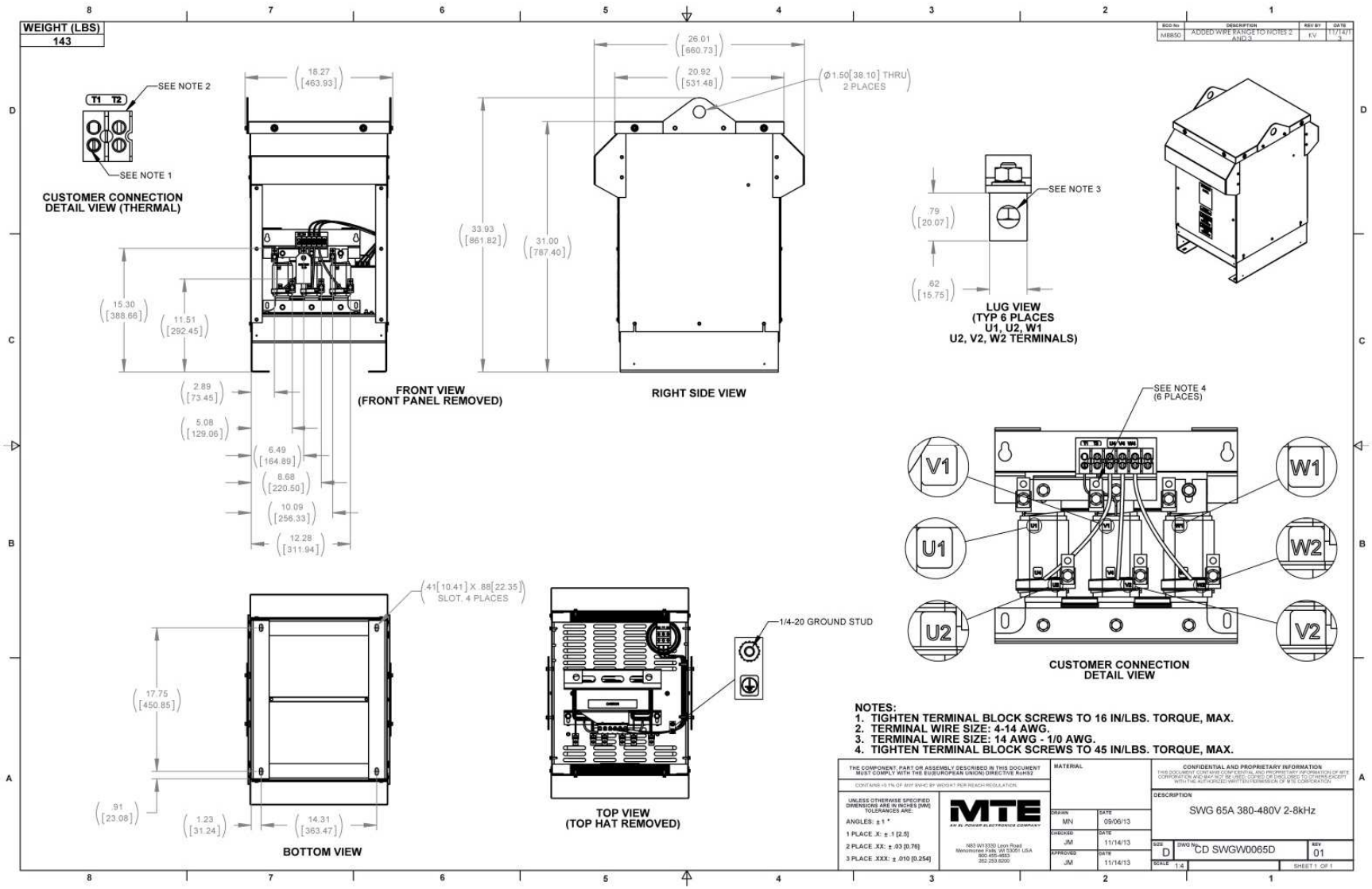

Figure A- 63: SWGW0065D

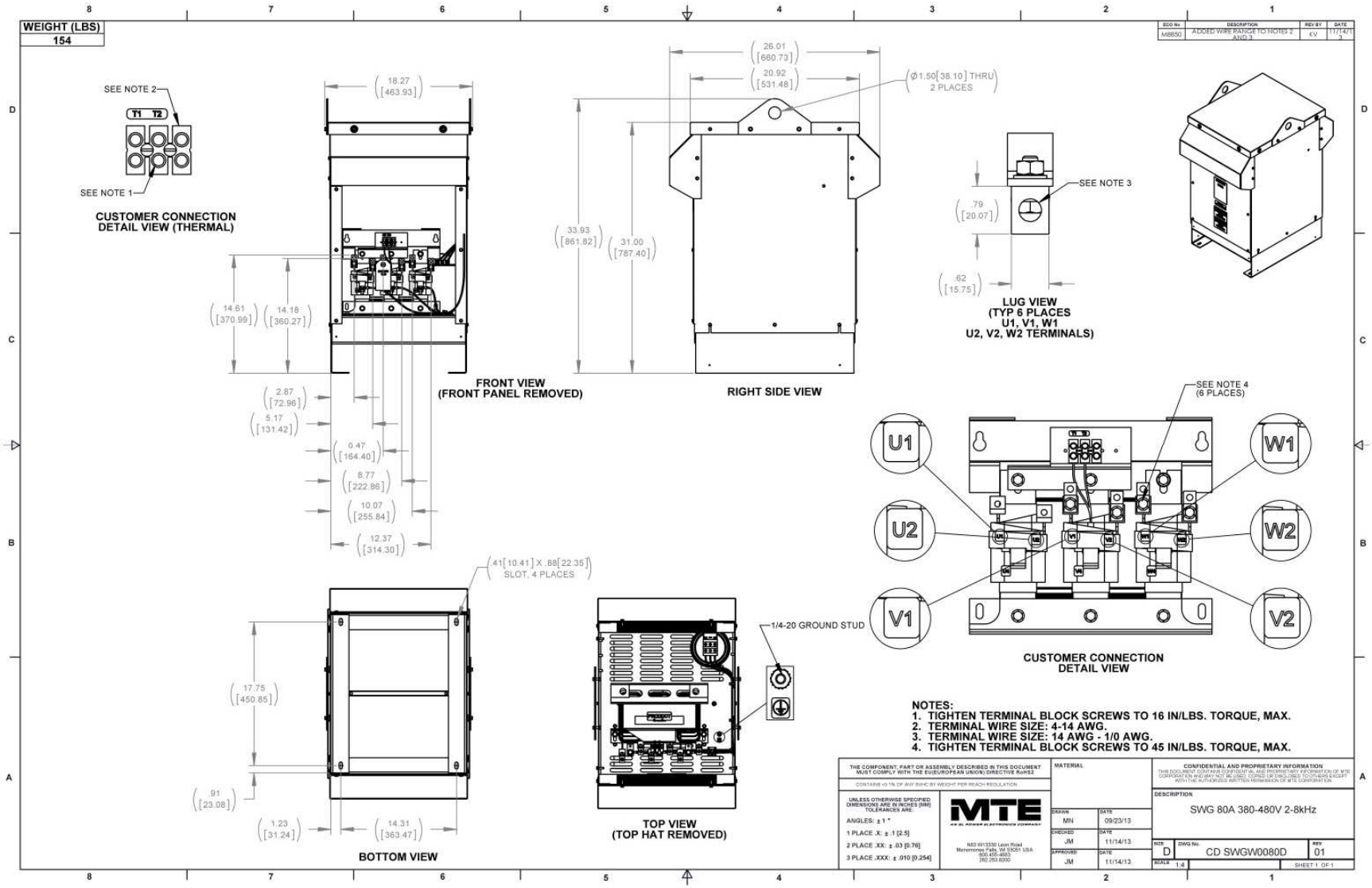

Figure A- 64: SWGW0080D

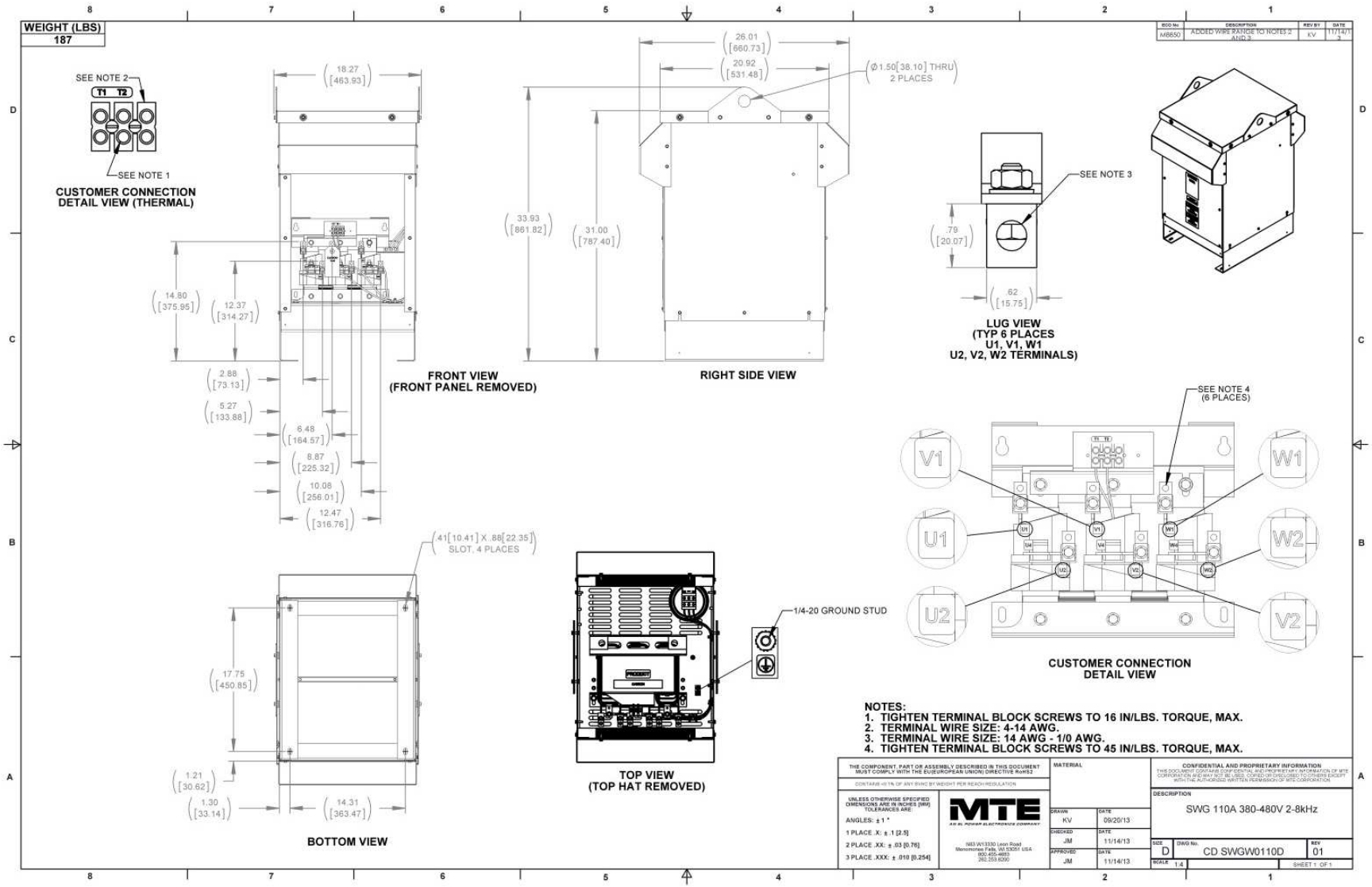

Figure A- 65: SWGW0110D

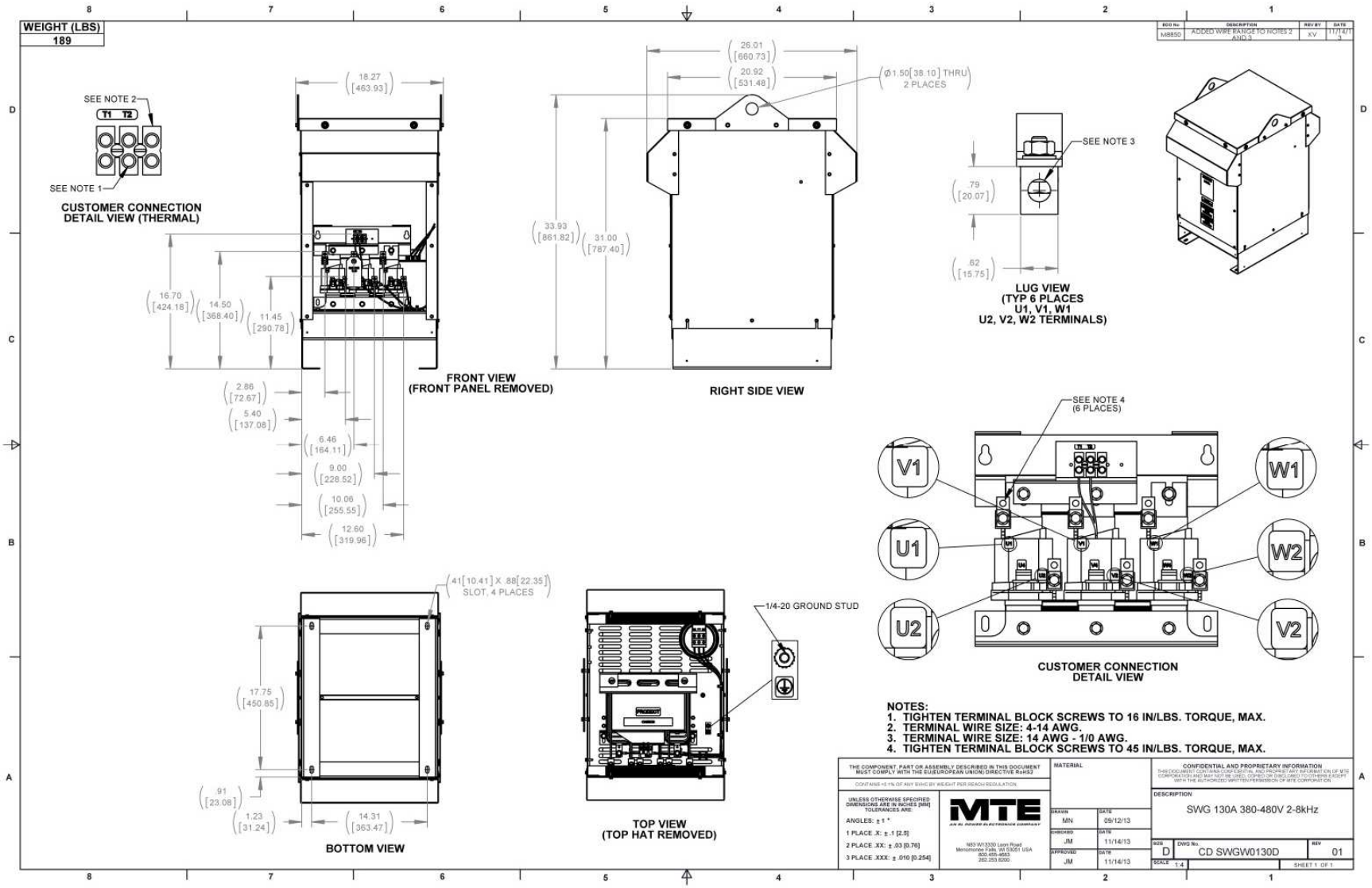

Figure A- 66: SWGW0130D

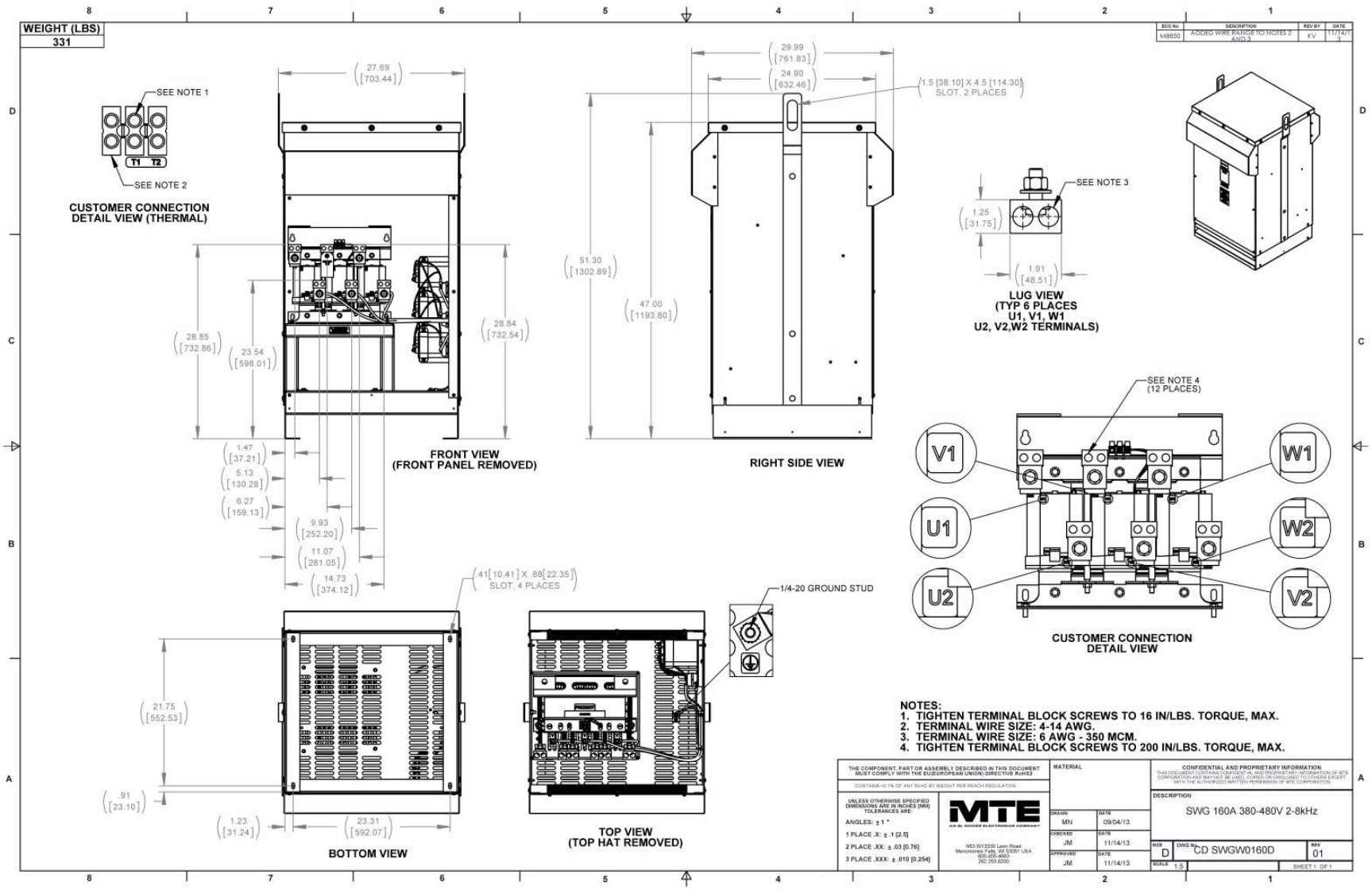

Figure A- 67: SWGW0160D

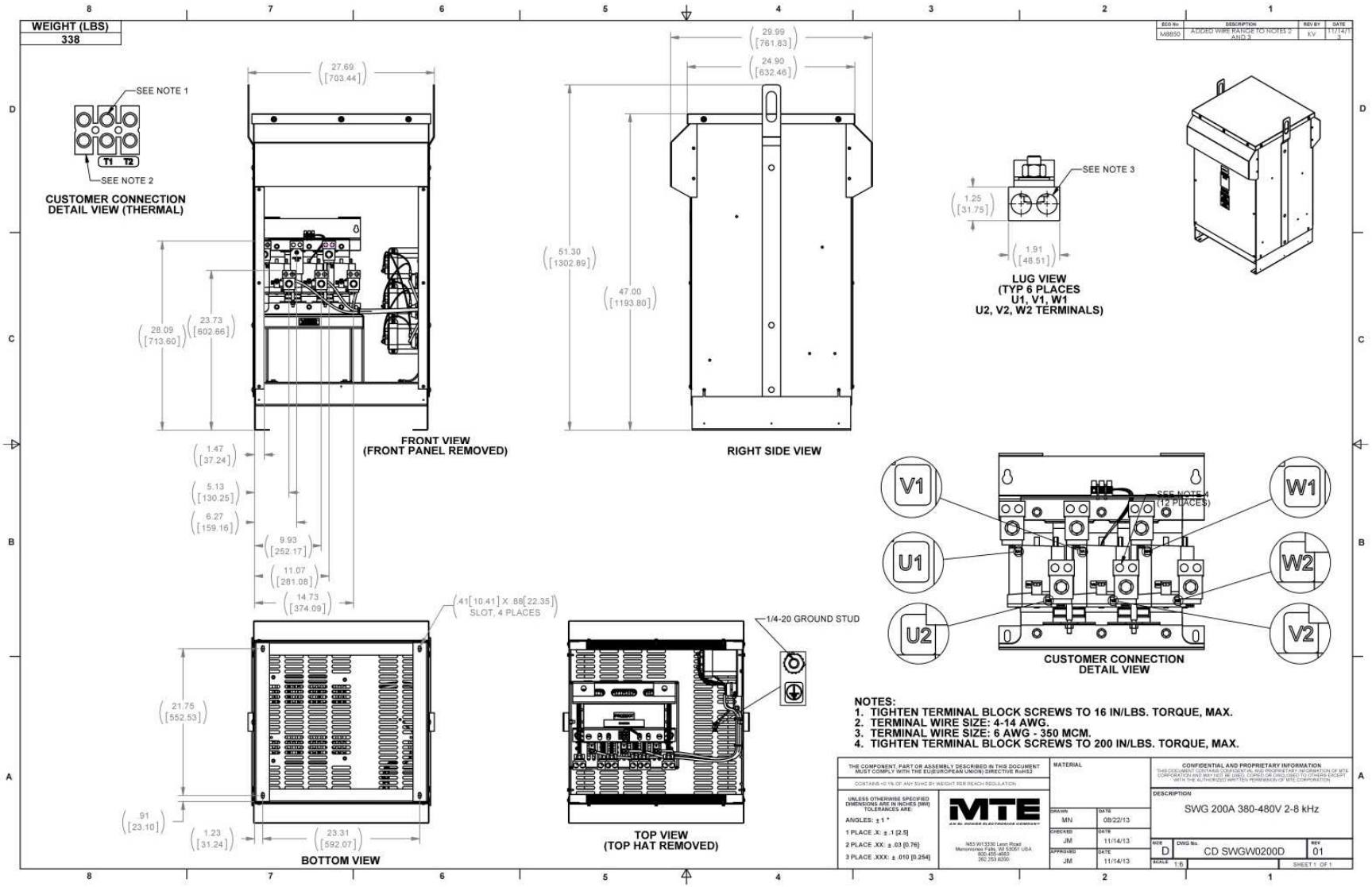

Figure A- 68: SWGW0200D

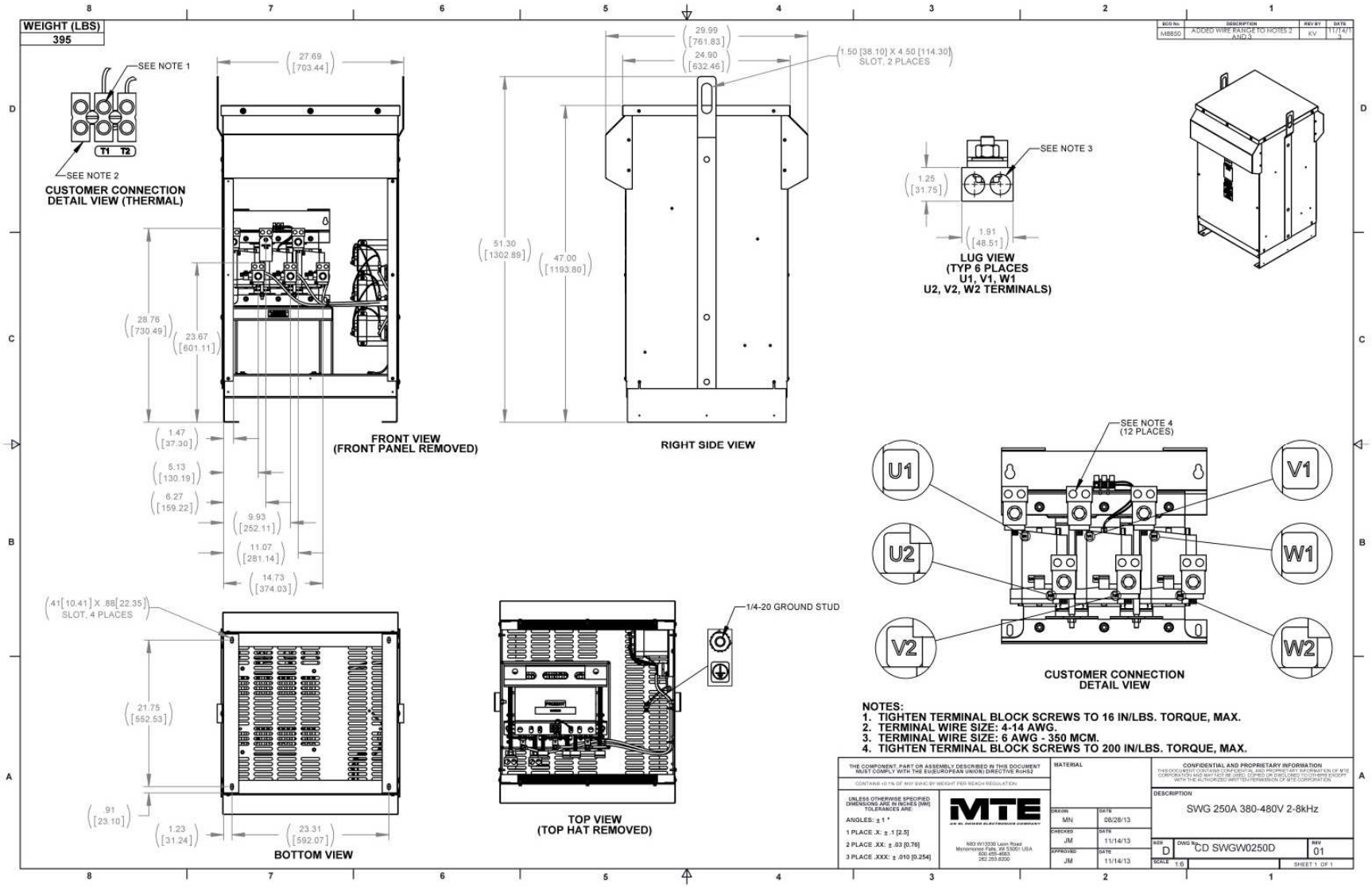

Figure A- 69: SWGW0250D

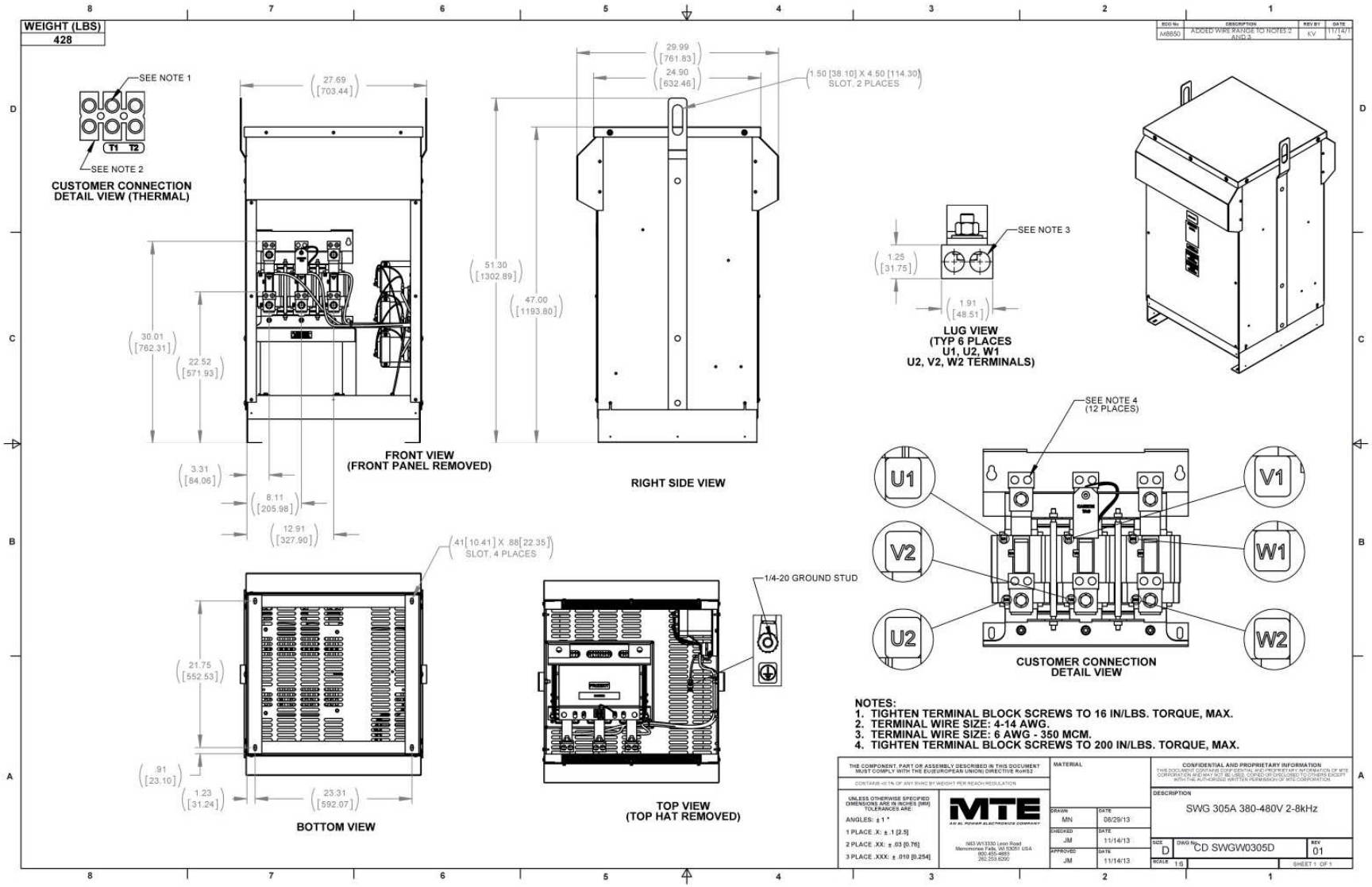

Figure A- 70: SWGW0305D

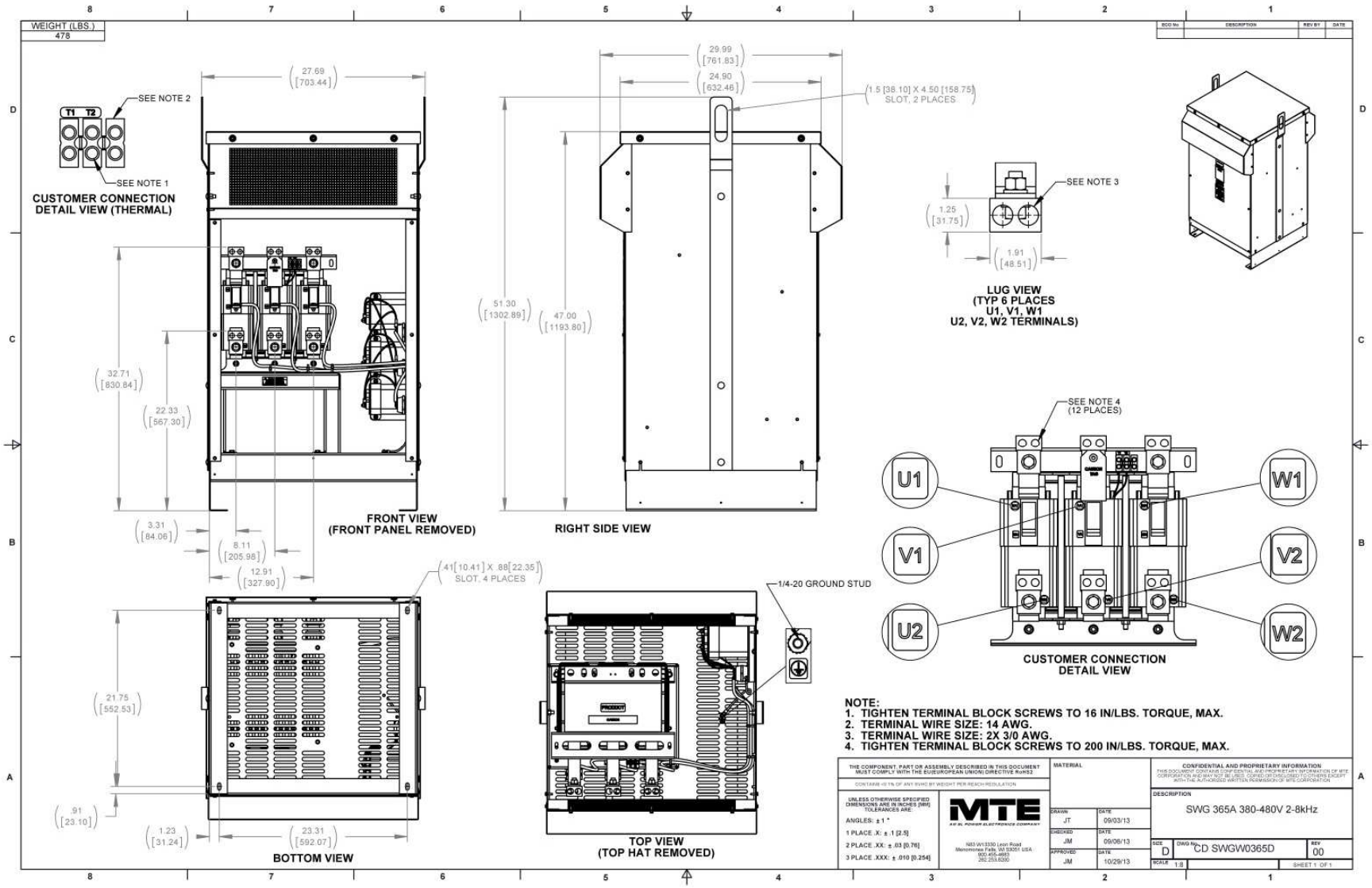

Figure A- 71: SWGW0365D

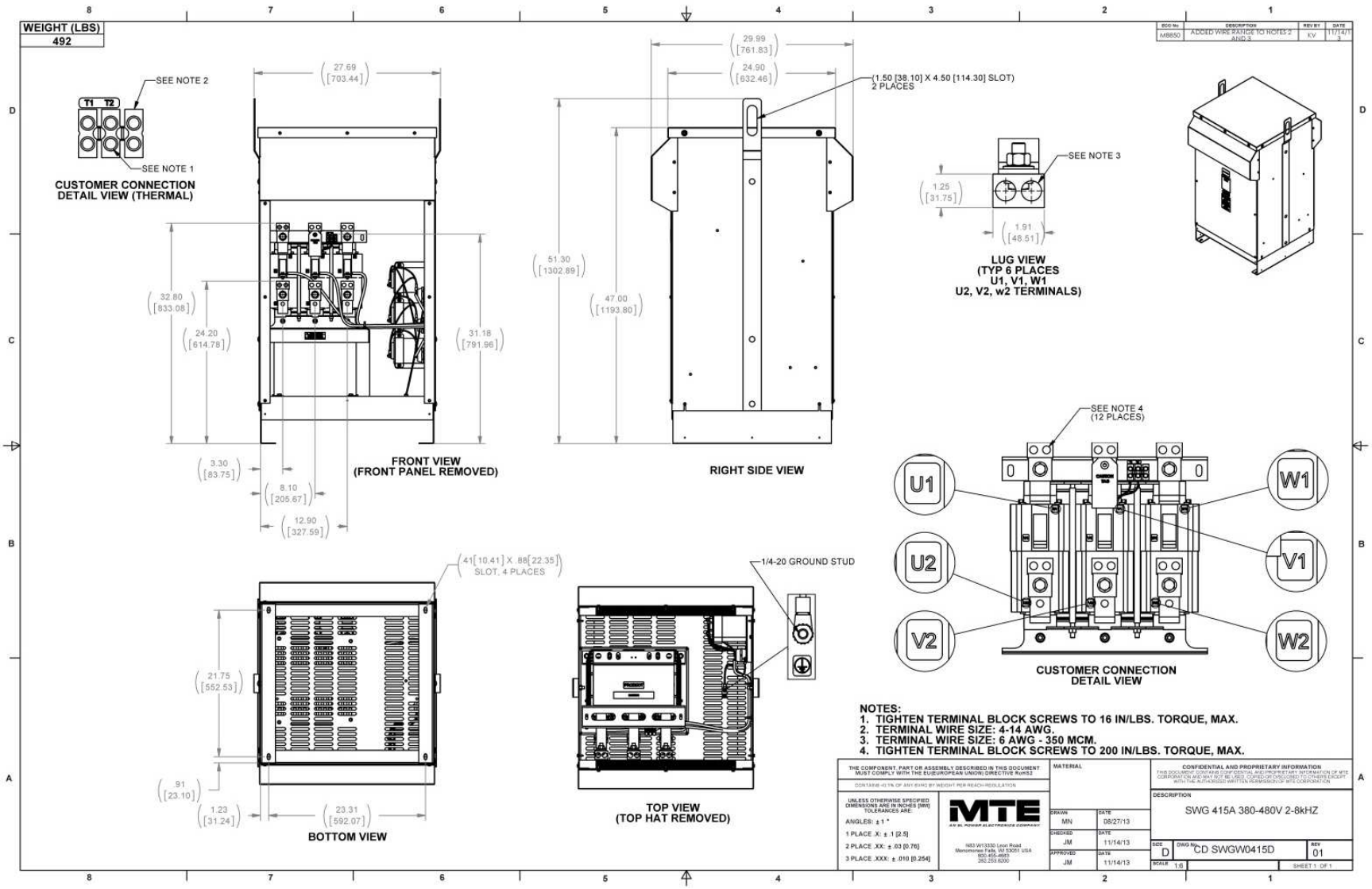

Figure A- 72: SWGW0415D

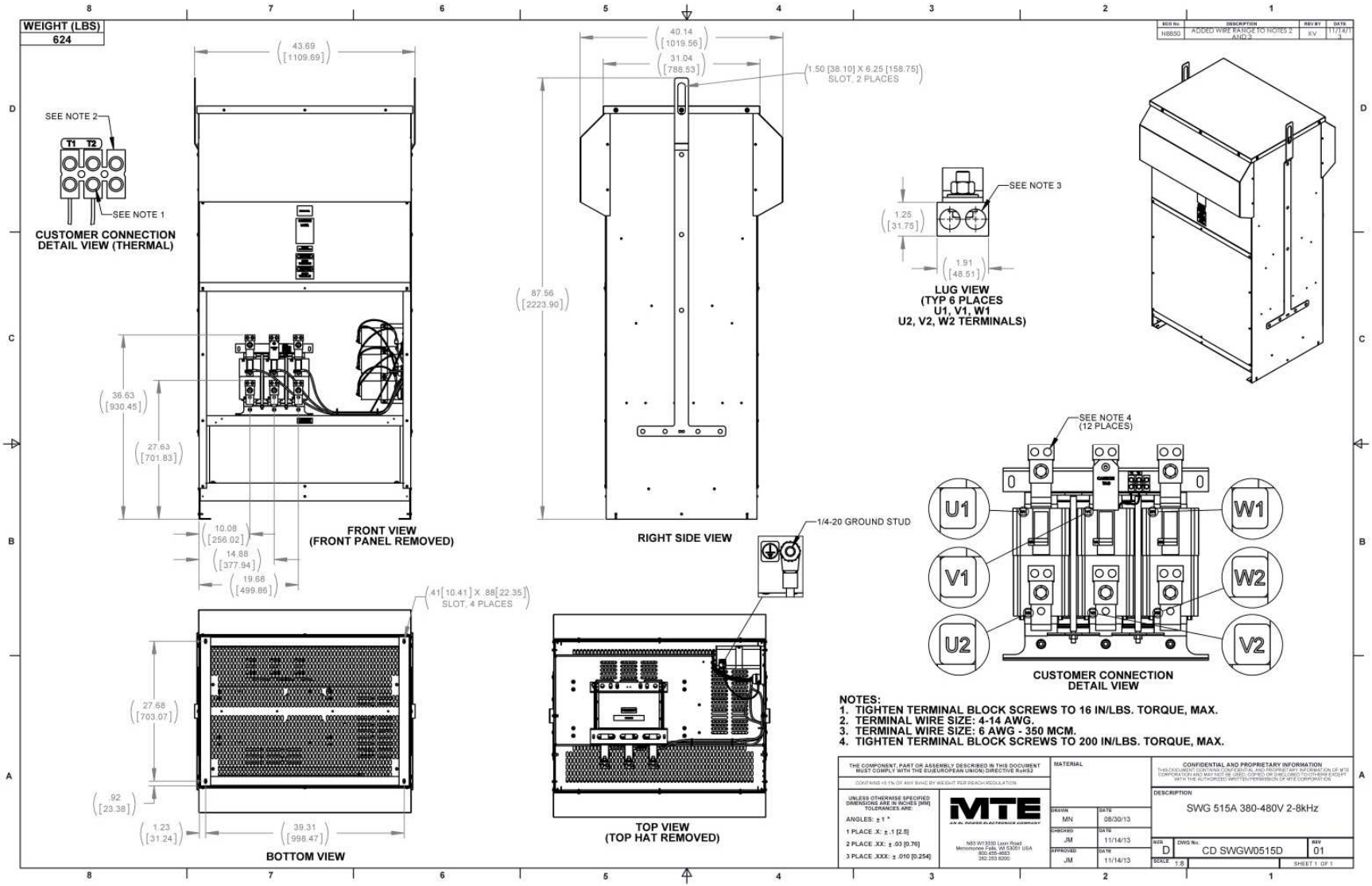

Figure A- 73: SWGW0515D

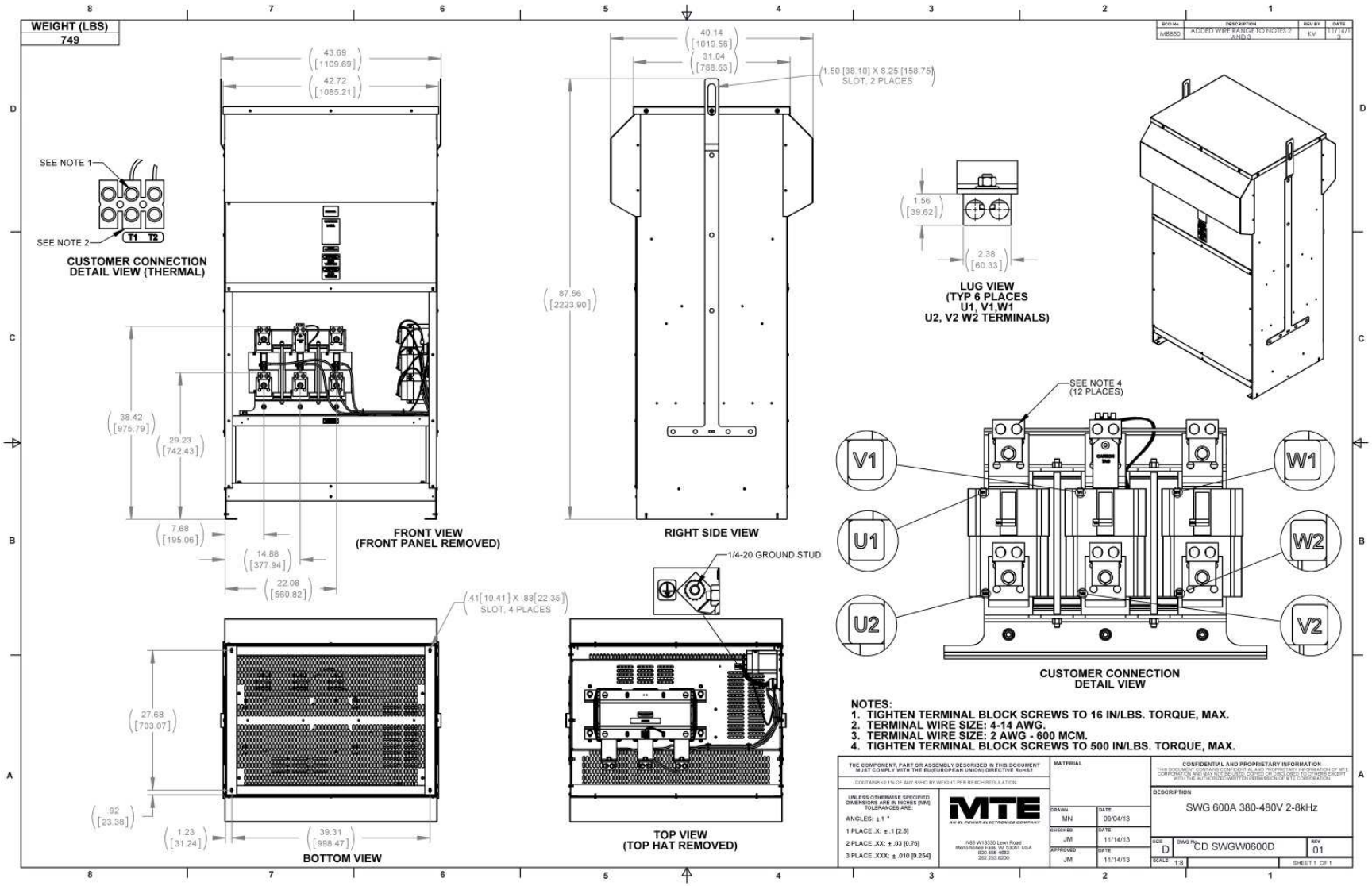

Figure A- 74: SWGW0600D

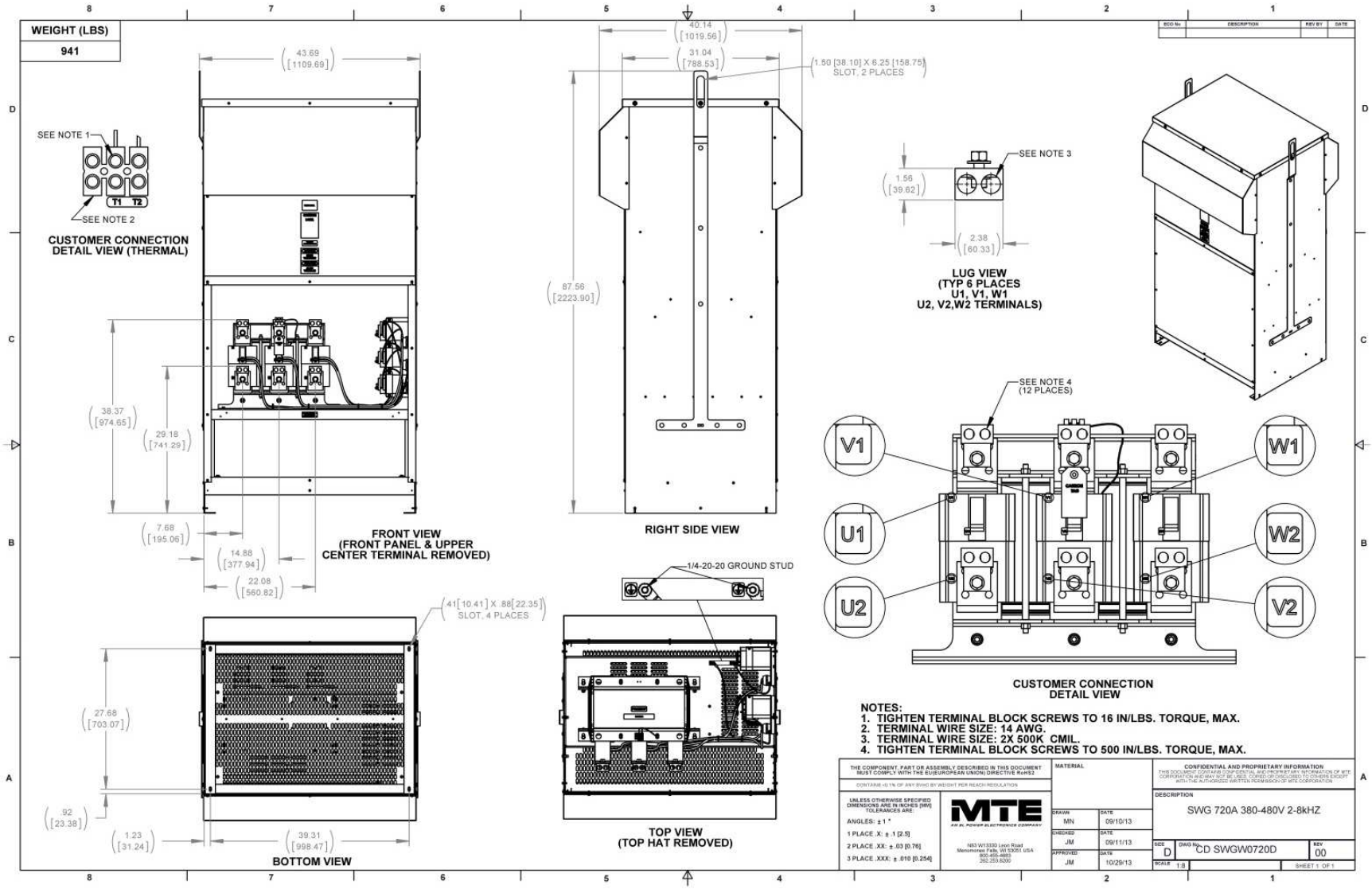

Figure A- 75: SWGW0720D

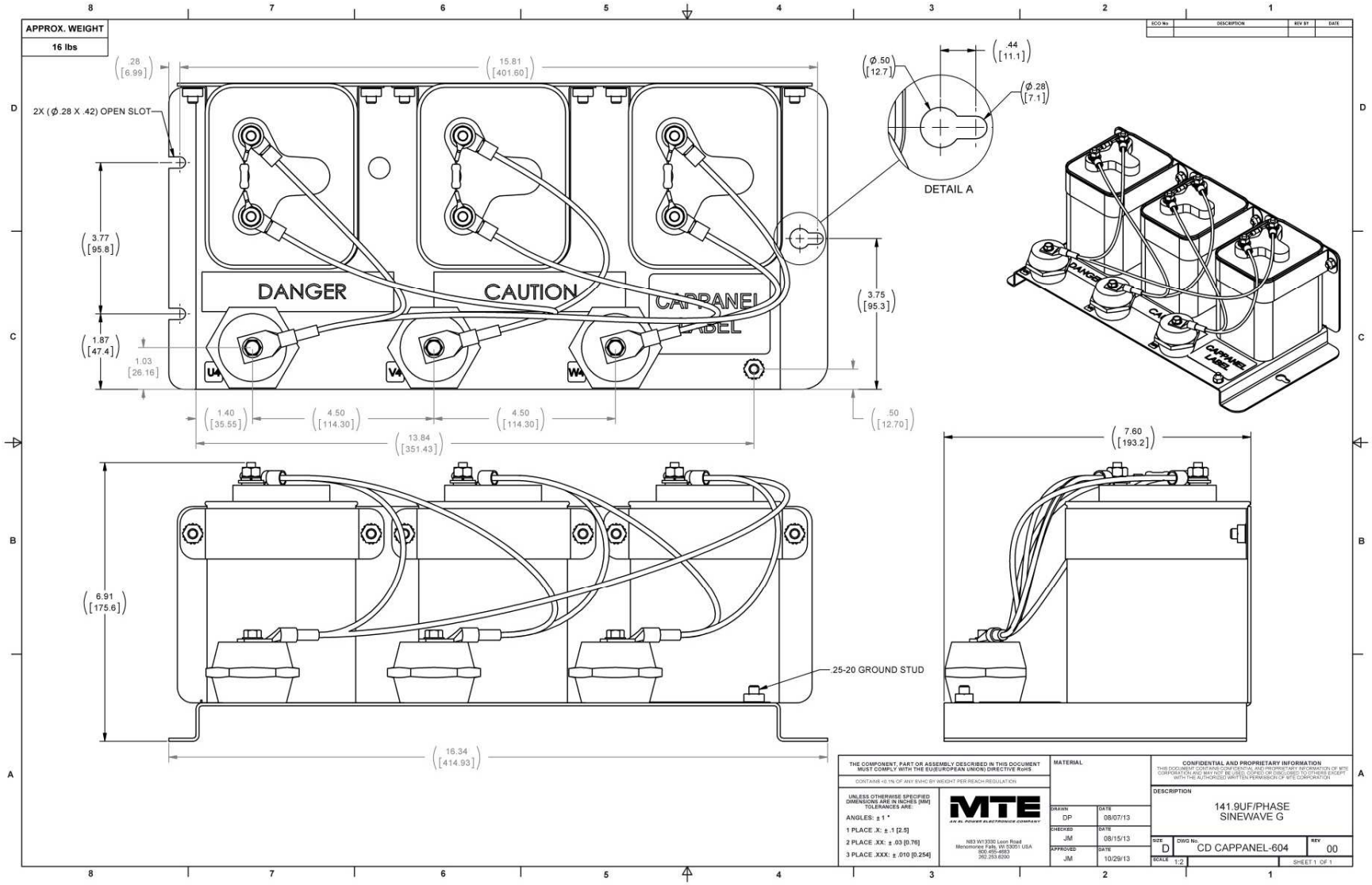

Figure A- 76: Cap-panel 604

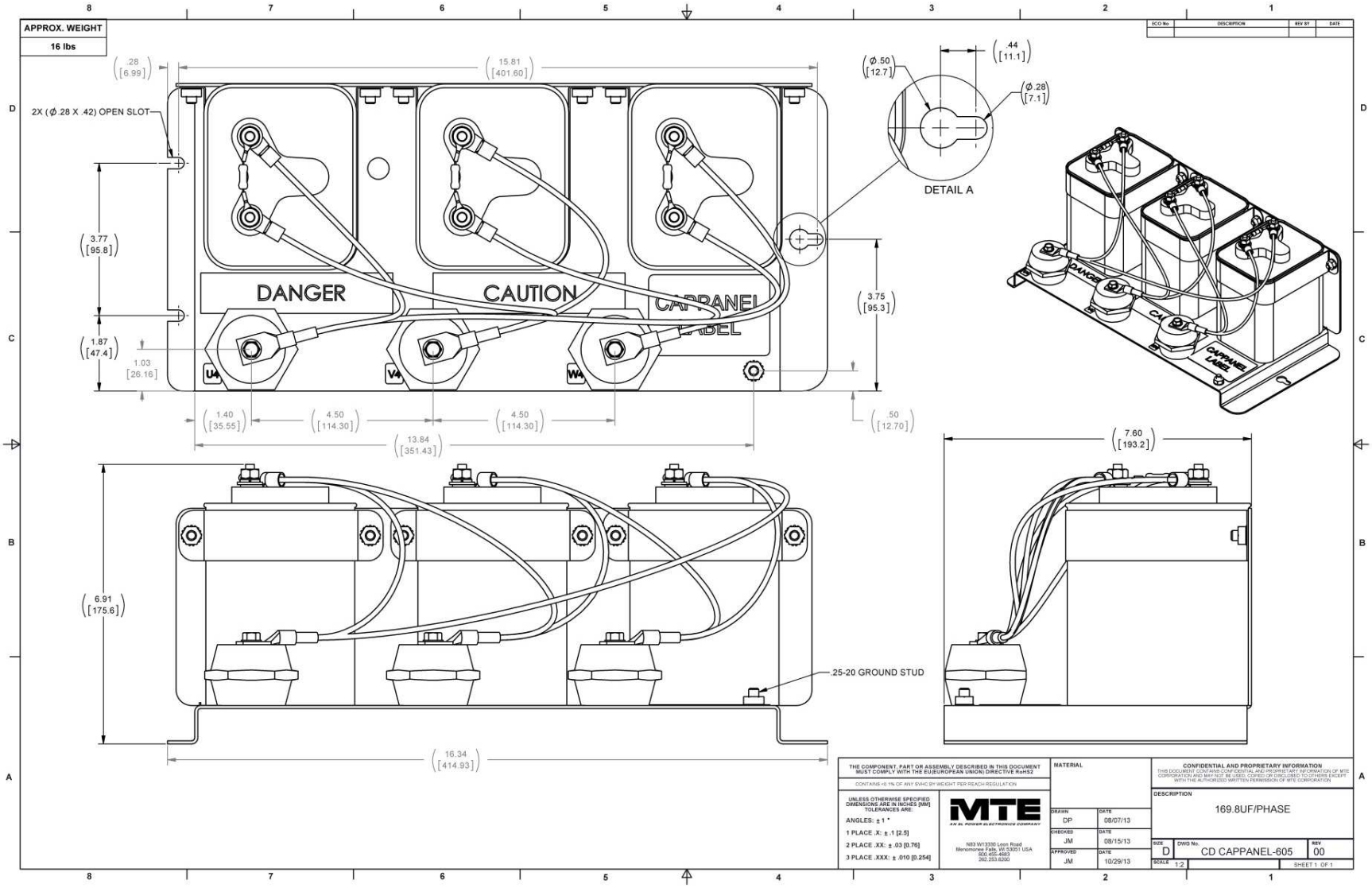

Figure A- 77: Cap-panel 605

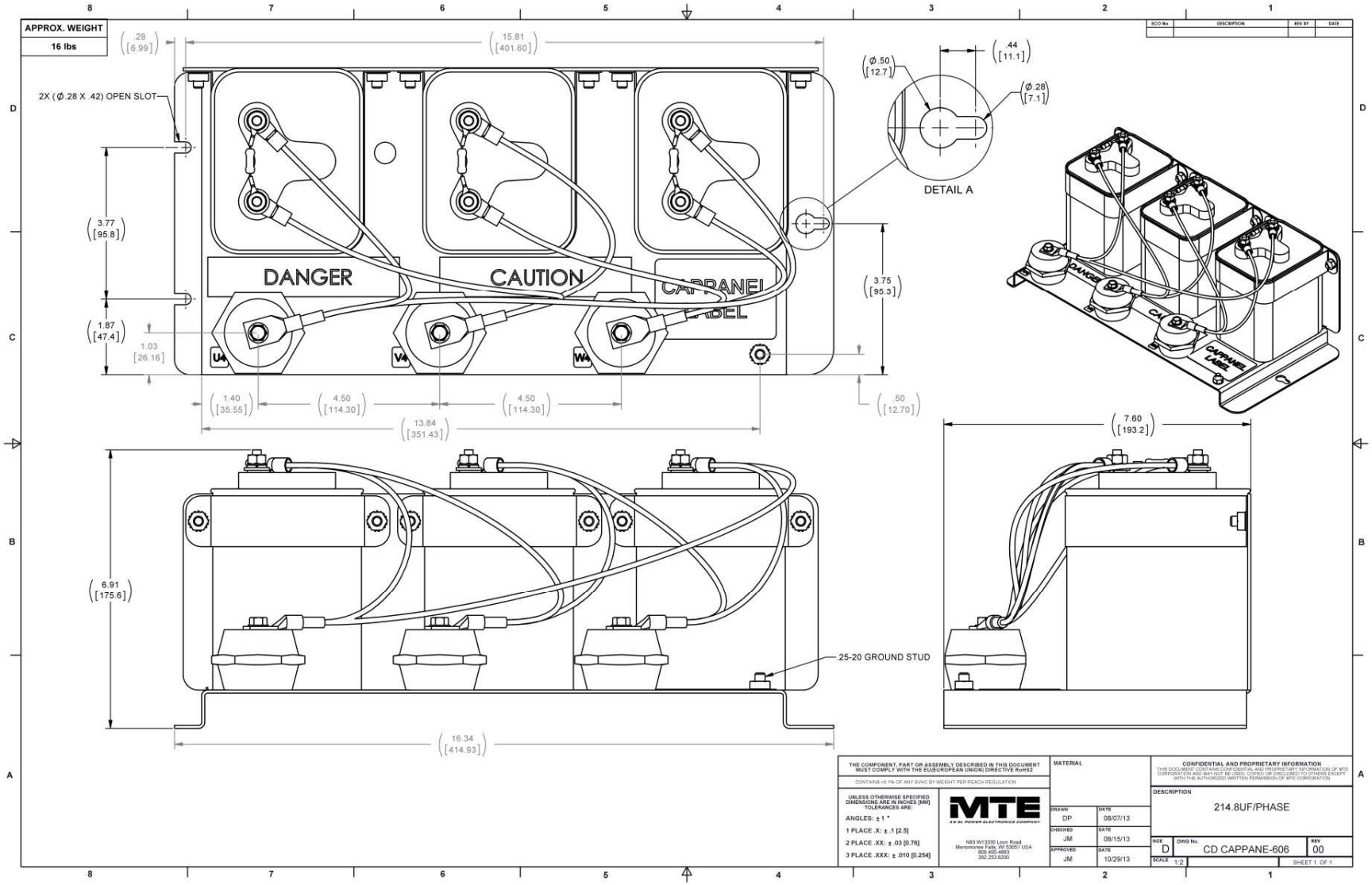

Figure A- 78: Cap-panel 606

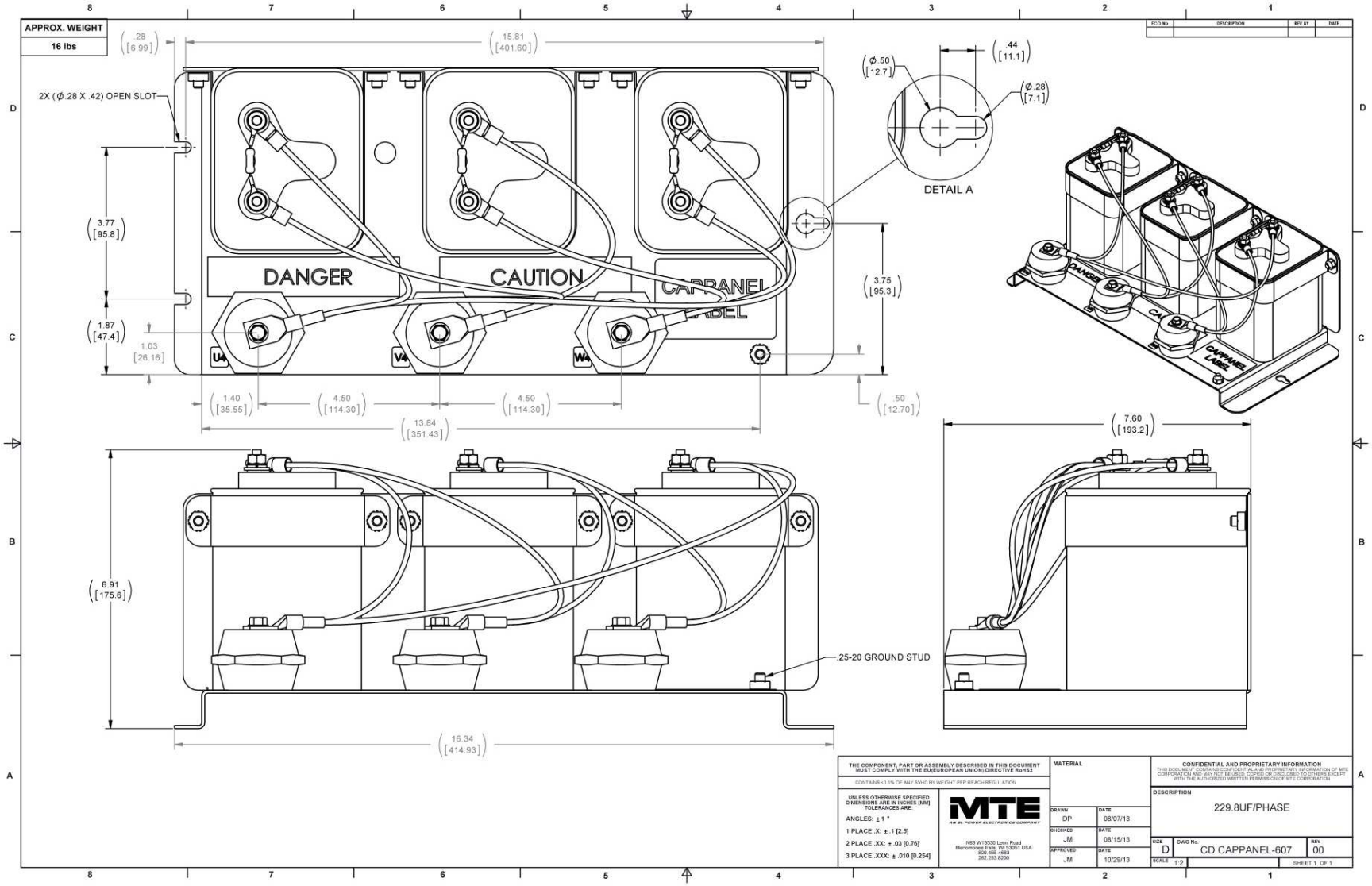

Figure A- 79: Cap-panel 607

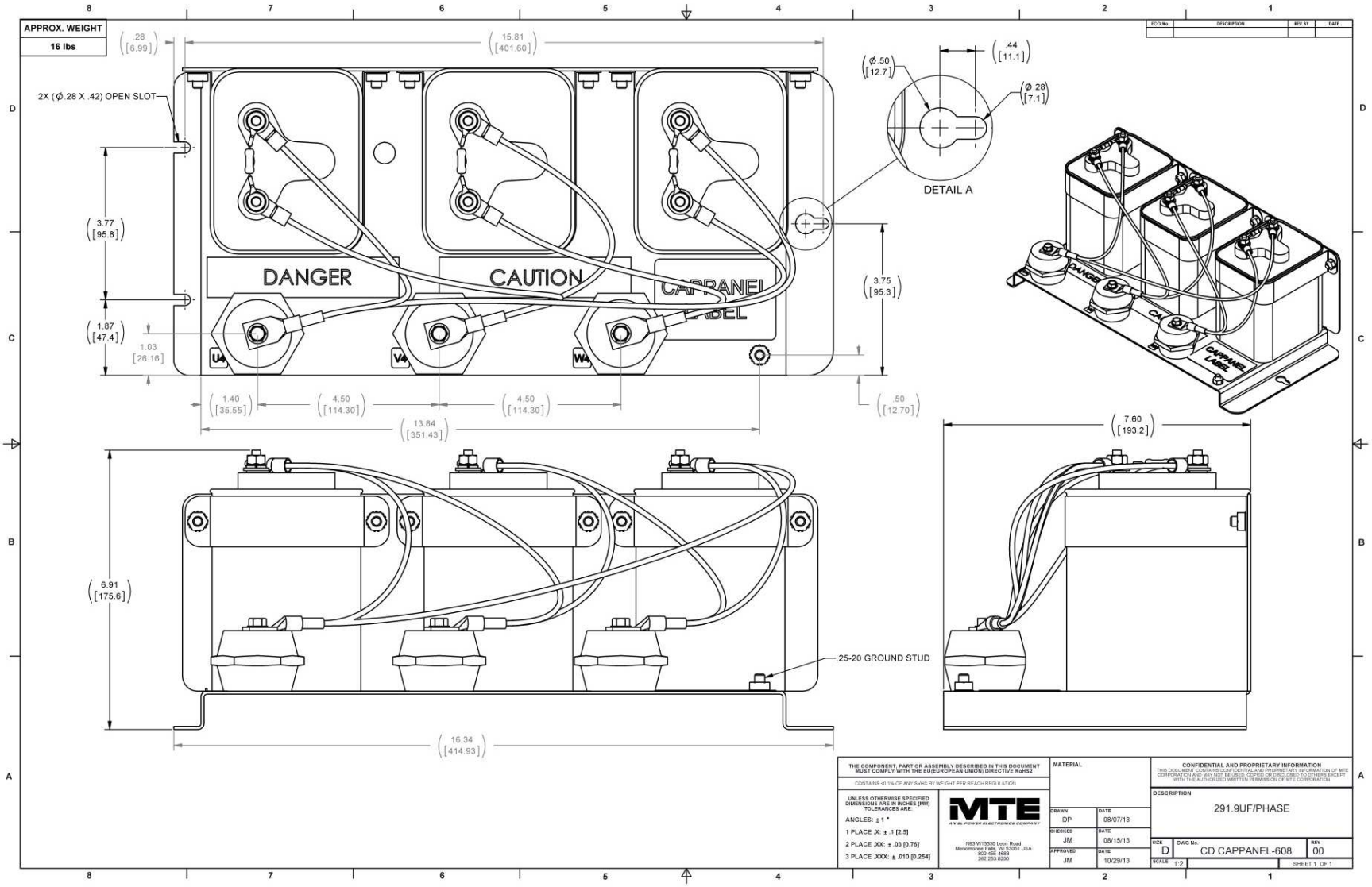

Figure A- 80: Cap-panel 608

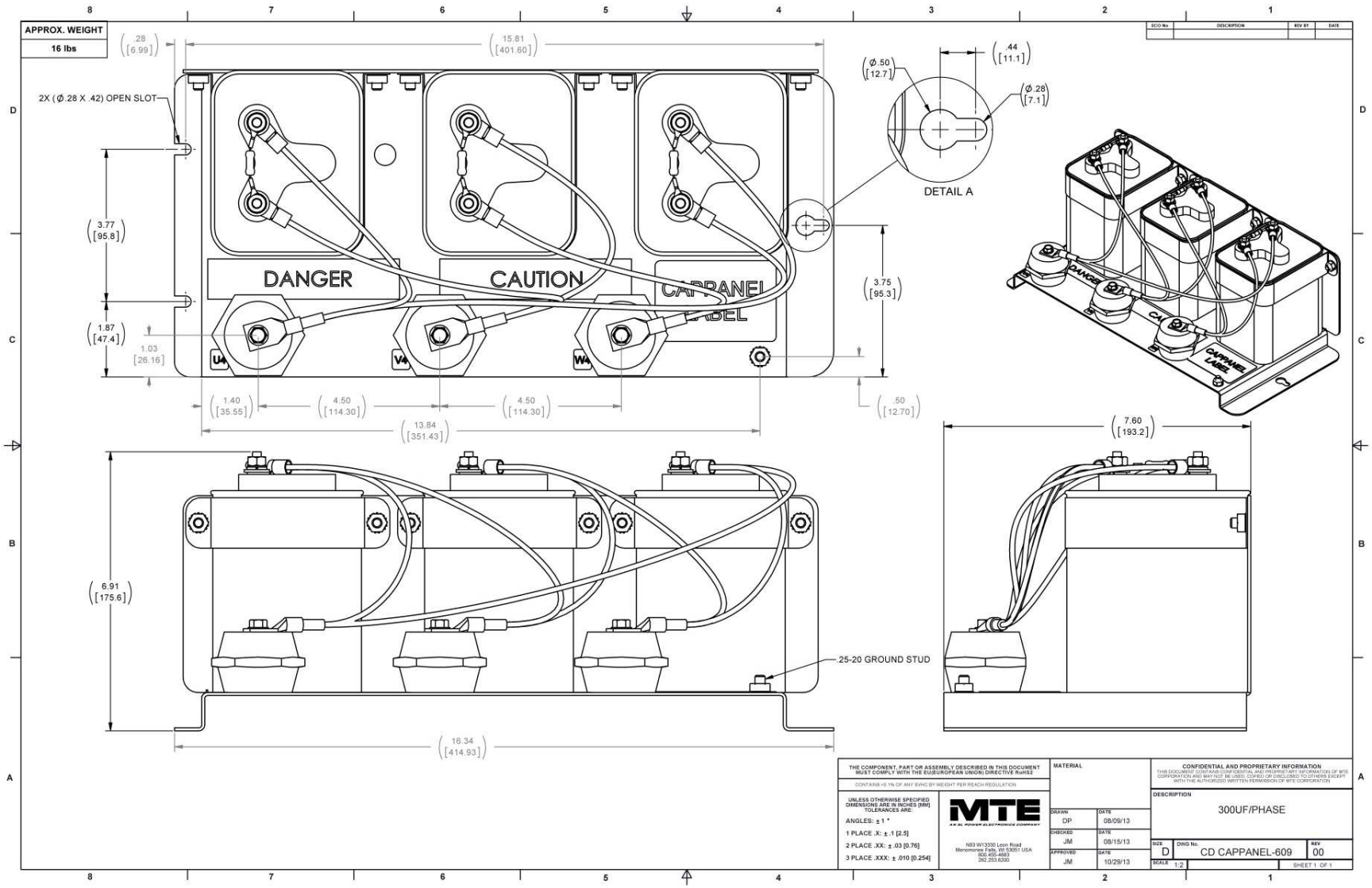

Figure A- 81: Cap-panel 609

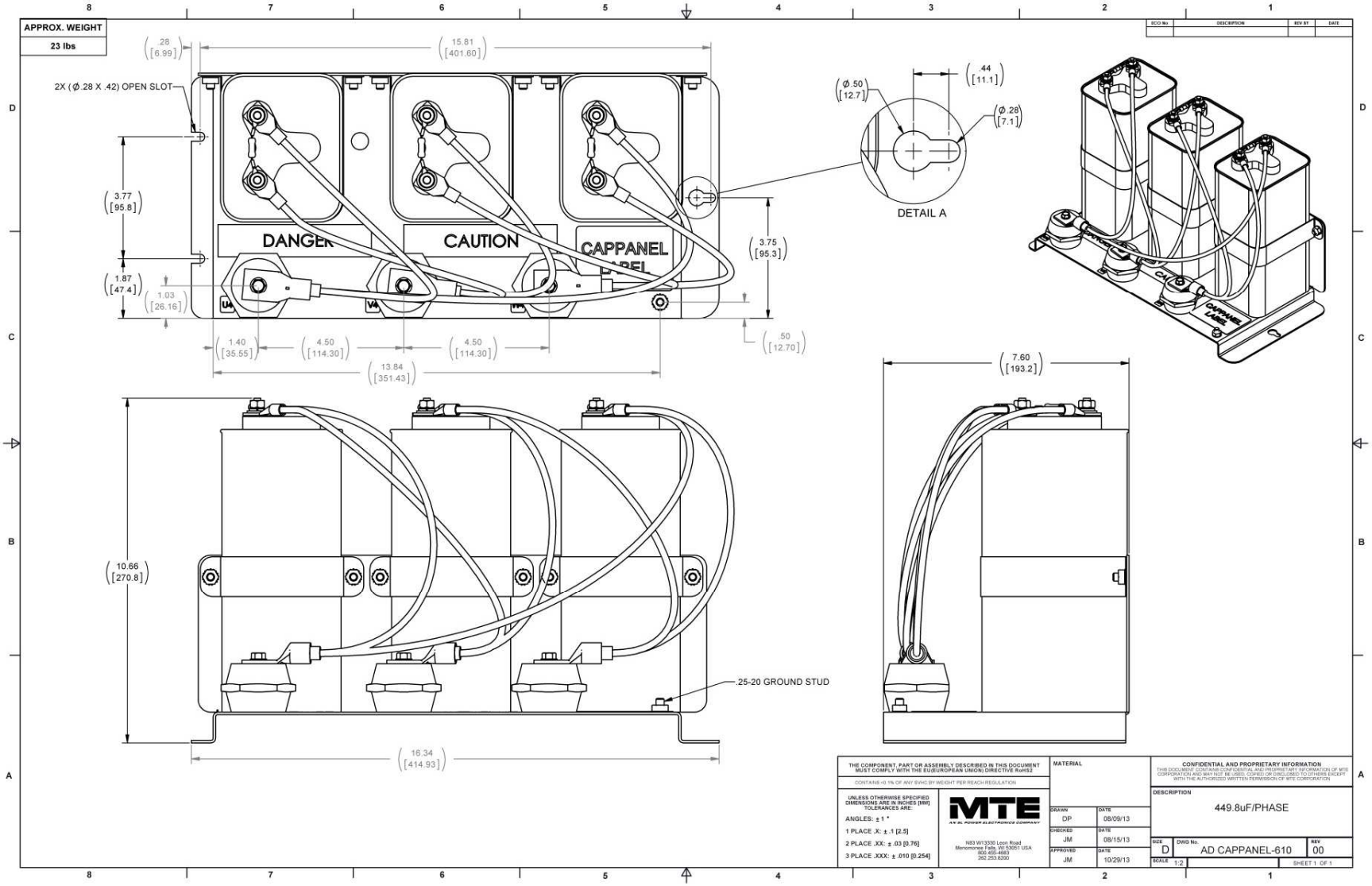

Figure A- 82: Cap-panel 610

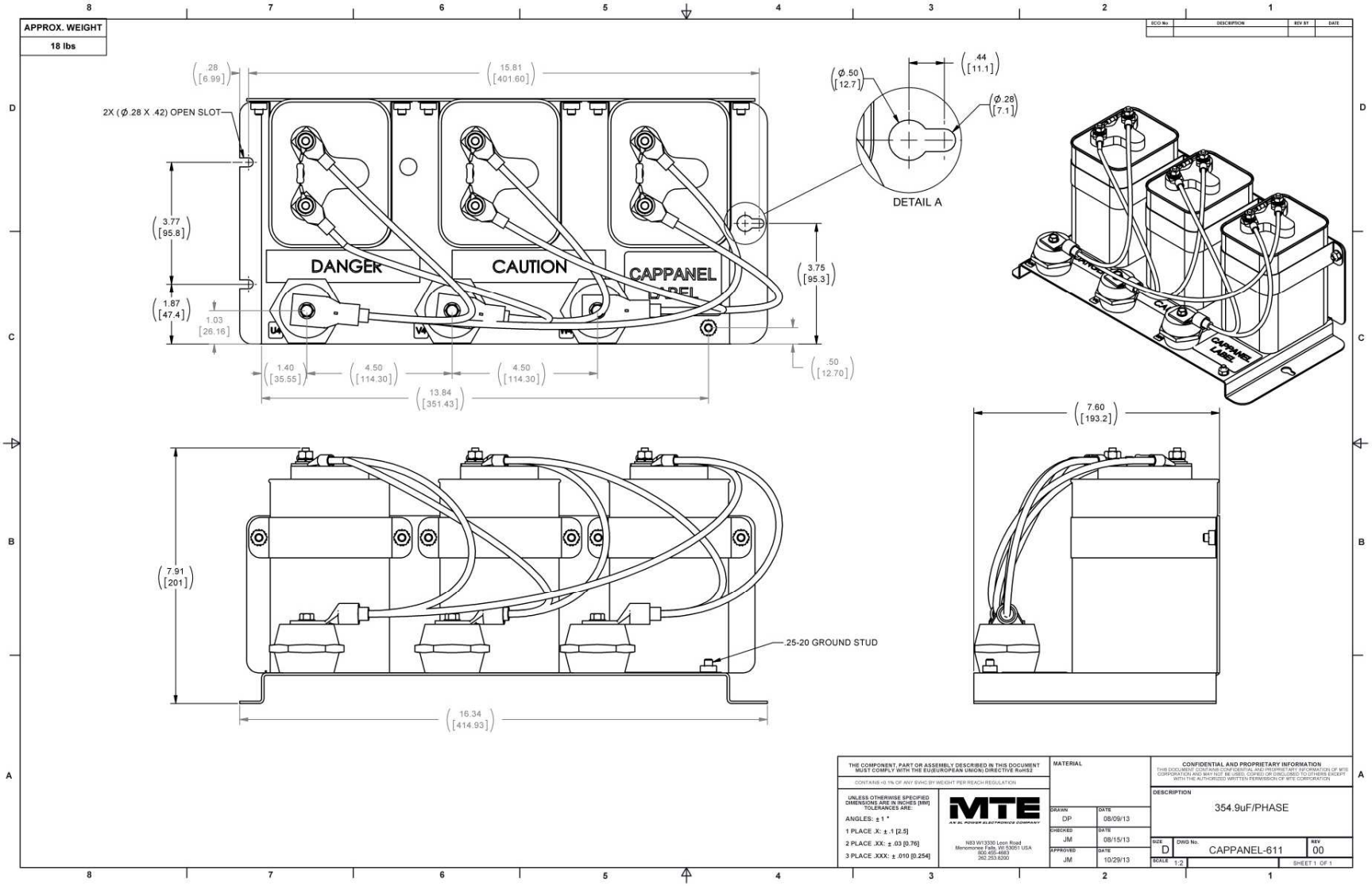

Figure A- 83: Cap-panel 611

(CAPACITORS) 3 PHASE

PART NUMBER	CAPACITANCE (uF)_TERM-TERM	DIAMETER (mm/inch)	HEIGHT (mm/inch)	WEIGHT (LBS)
CAP-501SW	.85	75/2.95	140/5.51	1.72
CAP-502SW	1.3	75/2.95	140/5.51	1.74
CAP-503SW	2.15	75/2.95	140/5.51	1.77
CAP-504SW	3.0	75/2.95	140/5.51	1.77
CAP-505SW	3.9	75/2.95	140/5.51	1.75
CAP-506SW	5	75/2.95	140/5.51	1.76
CAP-507SW	7.5	75/2.95	140/5.51	1.80
CAP-508SW	9.5	75/2.95	140/5.51	1.68
CAP-509SW	11.6	75/2.95	140/5.51	1.94
CAP-510SW	15.0	100/3.94	140/5.51	2.94
CAP-5011SW	19.4	100/3.94	140/5.51	3.04
CAP-512SW	24.0	100/3.94	161/6.34	3.18
CAP-513SW	28.0	100/3.94	161/6.34	3.22
CAP-514SW	29.5	116/4.57	161/6.34	3.23
CAP-515SW	47.5	116/4.57	161/6.34	4.13
CAP-516SW	51.0	116/4.57	161/6.34	4.14

ECO No	DESCRIPTION	REV BY	DATE

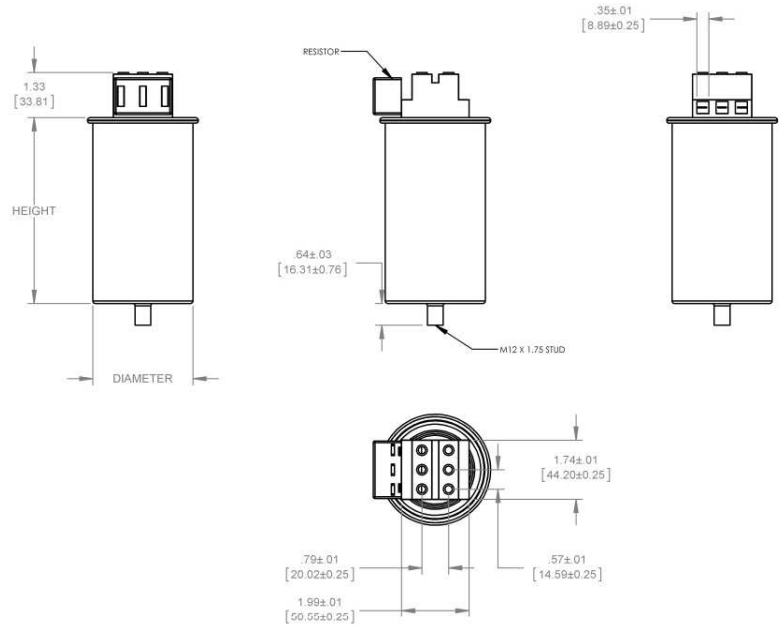

NOTES:

1. TERMINAL WIRE RANGE: 6-18 AWG
2. TERMINAL TORQUE 23 in-lb
3. STUD TORQUE 88 in-lb
4. M12 KEPPS NUT INCLUDED

THE COMPONENT, PART OR ASSEMBLY DESCRIBED IN THIS DOCUMENT MUST COMPLY WITH THE EU(EUROPEAN UNION) DIRECTIVE RoHS

CONTAINS <0.1% OF ANY SVHC BY WEIGHT PER REACH REGULATION

UNLESS OTHERWISE SPECIFIED DIMENSIONS ARE IN INCHES [MM] TOLERANCES ARE:
ANGLES: ± 1 °
1 PLACE .X: ± .1 [2.5]
2 PLACE .XX: ± .03 [0.76]
3 PLACE .XXX: ± .010 [0.254]

MTE AN SL POWER ELECTRONICS COMPANY
N83 W13330 Leon Road
Menomonee Falls, WI 53051 USA
800.455.4683
262.253.8200

MATERIAL

DRAWN	DP	DATE	08/15/13
CHECKED	JM	DATE	08/16/13
APPROVED	JM	DATE	10/29/13

CONFIDENTIAL AND PROPRIETARY INFORMATION
THIS DOCUMENT CONTAINS CONFIDENTIAL AND PROPRIETARY INFORMATION OF MTE CORPORATION AND MAY NOT BE USED, COPIED OR DISCLOSED TO OTHERS EXCEPT WITH THE AUTHORIZED WRITTEN PERMISSION OF MTE CORPORATION

DESCRIPTION
3 PHASE CAPACITORS

SIZE	DWG No.	REV
B	CD CAP-XXXSW	00

SCALE 1:3 SHEET 1 OF 1

Figure A- 84: CAP-XXXSW